VHF

FOR THE RADIO AMATEUR

FRANK C. JONES W6AJF

CQ
Technical Series

Everywhere you turn, there's something

NEW

from **hallicrafters**

HA-2 & HA-6
TRANSVERTERS

Now—go single sideband on VHF!

New transverter converts your present 10-meter station to VHF... AM, CW, SSB, RTTY, FM capability.

Complete, effective, easy to install—Hallicrafter's new HA-2 or HA-6 transverters offer a new approach to Single Sideband on VHF.

All modes of transmission and reception available on your present equipment are useable with these units.

Inputs up to 120 watts to the 5894 final can be obtained by exciters having a capability of 10 to 100 watts.

A nuvistor front end in the receiver section provides excellent sensitivity and noise figures.

Furnished less power supply. Requirements: 750 volts @ 160 MA; 250 volts @ 70 MA; Minus 60 volts @ 10 MA.

HALLICRAFTERS MODEL P-26 POWER SUPPLY

Unit (not illustrated) supplies all voltages; only one supply necessary for operation of either HA-2 or HA-6 when used in stations set up for 2 and 6 meter operations.

hallicrafters Chicago 24, Ill.

Export Sales: International Div., Raytheon Co., Waltham, Mass. *Canada:* Gould Sales Co., Montreal, P. Q.

$3.50

VHF

FOR THE

RADIO AMATEUR

Frank C. Jones, W6AJF

COWAN PUBLISHING CORP.
300 WEST 43rd ST., NEW YORK 36, N. Y.

Edited by Irving Tepper

First Printing July 1961

Second Printing May 1962

© 1961 by Cowan Publishing Corp. All rights reserved.
This book or any parts thereof may not be reproduced in any form or any language without permission of the publisher.

Library of Congress Catalog Card Number 61-11995

Printed in the United States of America

CONTENTS

		Page
Introduction		**5**
1		
Vhf Radio Propagation		**7**
1.1	50 MC Propagation	7
1.2	144 MC Propagation	9
1.3	220 MC Propagation	11
1.4	432 MC Propagation	11
1.5	1296 MC Propagation	11
2		
Antennas		**13**
2.1	Discussion	13
2.2	R.F. Transmission Lines	14
2.3	Types of Antennas and Design Charts	15
2.4	50 MC Antennas	21
2.5	144 MC Antennas	24
2.6	220 MC Antennas	28
2.7	432 MC Antennas	32
2.8	1296 MC Antennas	40
3		
Transmitters		**47**
3.1A	50 MC Low Powered Transmitter	48
3.1B	6WGT 50 MC Transmitter	51
3.1C	6WGB 50 MC Transmitter	54
3.1D	50 MC Exciter	58
3.1E	High Powered 50 MC Amplifier	61
3.2A	Low Powered 144 MC Transmitter	65
3.2B	144 MC Exciter	68
3.2C	High Powered 144 MC Amplifiers	71
3.3A	222 MC Exciter	74
3.3B	High Powered 222 MC Amplifier	79
3.3C	220 MC Flat Plate Line Amplifier	81
3.4A	2C39 Units on 432 MC	82
3.4B	Coaxial Line Transmitter	87
3.4C	432 MC Flat Plate Line Transmitter	90
3.5A	1296 MC Cavity Transmitter	94
3.5B	1296 MC Flat Line Transmitter	97
4		
Modulation		**101**
4.1	6L6 Modulator	102
4.2	6W6 Class B Modulator	105
4.3	6Y6 Class B Modulator	107
4.4	50 Watt Modulator	109
4.5	Screen Grid Modulator	111
4.6	Frequency Modulator	113
4.7	Transistor Speech Amplifier	115
4.8	Phase Modulator	117
4.9	Vacuum Tube Keyer	117

Page

5

Power Supplies **121**
5.1 Small Power Supplies 122
5.2 Selenium and Silicon Rectifiers 123
5.3 Voltage Doublers 125

6

Converters **127**
6.1 Converter for 50 MC 128
6.2 Converter for 144 MC 132
6.3 Converter for 220 MC 134
6.4 Converter for 432 MC 139
6.5 Converter for 1296 MC 144

7

Receiver IF Systems **149**
7.1 14 to 18 MC IF Receiver 151
7.2 Audio Filter 156

8

Preamplifiers **159**
8.1 220 MC Tube Preamplifiers 160
8.2 Parametric Amplifiers 161
8.3 Pump Oscillators 164
8.4 144 MC Parametric Amplifiers 170
8.5 220 MC Parametric Amplifiers 177
8.6 432 MC Parametric Amplifiers 178

9

Test Equipment **185**
9.1 Diode A.C. Voltmeter 185
9.2 A.C. and D.C. Diode Voltmeter 186
9.3 Field Strength Meters and Monitors 188
9.4 Transistorized Field Strength Meter 189
9.5 1296 MC Wavemeter and Noise Generator 191
9.6 SWR Meters 193
9.7A Frequency Markers 196
9.7B Transistorized Frequency Marker 198
9.7C Dual Transistor Signal Marker 199
9.8 Transistor Audio Oscillator 201

Introduction

THIS HANDBOOK concerns the ideas and practical designs which have been proven satisfactory in actual amateur operation. Very little theory on radio has been included since this part has been covered in many magazine articles and in other types of handbooks. In some portions of this handbook it has been necessary to include brief discussions of the theories involved. All of the apparatus shown in the illustrations, and described in any detail, has been built and tested or used at the station, W6AJF, during the past two years. During that period many antennas and pieces of gear have been built by the author which haven't performed as well as they should. These have been discarded and forgotten. Those items which did perform satisfactorily have been included in this handbook.

The VHF, very-high-frequency, and some UHF, ultra-high-frequency, amateur bands are the focal points of interest in this text. The equipment in each case is designed for operation in one of these amateur bands, 50, 144, 220, 432, or 1296 mc. In general, each amateur band requires a different type of transmitter, antenna, or receiver or portions which are different. This means an enormous amount of apparatus if all bands are to be used. Most amateurs will pick one or two of these bands and perhaps add more bands of operation over a period of years in order to keep their interesting hobby really alive. In any case, new ideas and types of apparatus or parts are being developed continuously, which makes these VHF bands most fascinating. The amateurs have in the past and probably will always have a very good part to play in this interesting new field. The expression "new" is used since there is always something new to try, or test, or to prove. Thirty-five years of something new every year has kept the author's interest in these VHF bands more alive as a hobby. Each year seems to make it more interesting. Back in 1924 and 1925 the writer managed to transmit signals on two meters for distances of up to two to three miles. Two years ago KH6UK and W6NLZ proved that this frequency could be used over a distance nearly 1000 times as far. These two amateurs have made the contacts again in the 220 mc amateur band, employing ideas or theories that would have been considered fantastic a

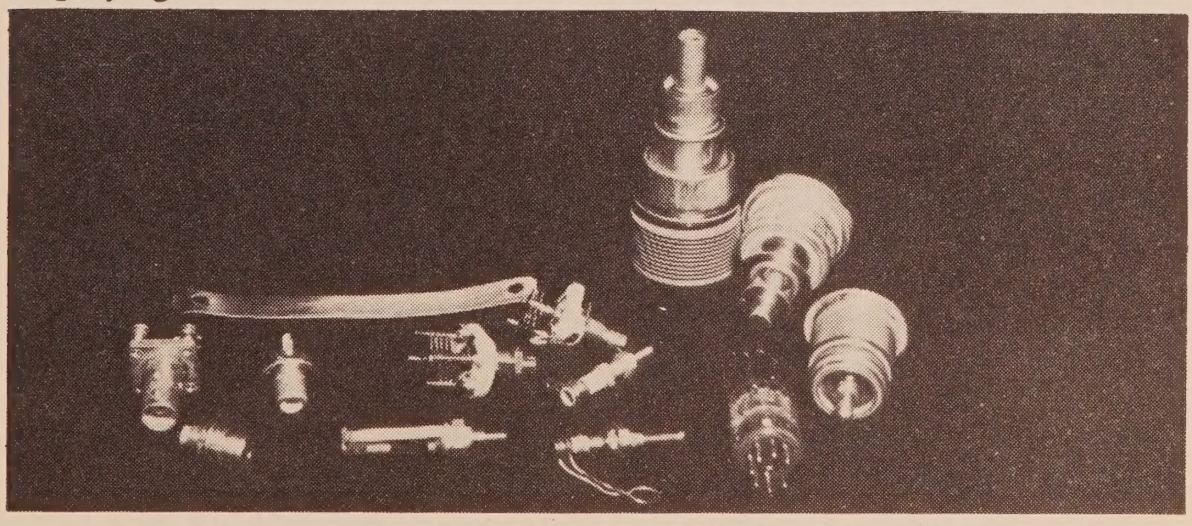

Fig. 1—An assortment of typical VHF parts. These units are described in the text.

few years ago. These amateur records were made without benefit of moon-bounced signals, which in itself opens up a fascinating field for them. With new ideas in receivers and better antennas, moon-bounced signals should be feasible for long distance contacts as in the 1296 mc band. When other services finally agree to permit amateurs to operate in the 432 mc band with more than 50 watts, some astounding amateur contacts may be made.

The radio parts used in all of the gear for these higher frequency bands begin to take different shapes from those used in the other frequency bands. A few miscellaneous parts shown in fig. 1 illustrate this point. In place of the usual coil or wire, a flat piece of copper strip may be needed. The coaxial antenna or connectors between units are apt to be small, such as those at the left side of fig. 1. The tuning capacitors may be miniature variable plate or piston types of the forms in the center of the photograph. Tubes such as the 6AM4 and 5842 grounded grid triodes still look like other miniature receiving tubes with 9 pin bases, and the 7 pin miniature 6AF4 triode shown is used in the pump oscillators of parametric amplifiers. These amplifiers are a new development and a real improvement for VHF operators. The 416B gold plated triode, at the right side of the photograph, has led the field for low noise amplifiers until parametric amplifiers and maser units were developed. Another VHF triode, the 2C40 also lying on its side and a bit larger than the 416B, has been a useful tube in the past and is still useful in parametric pump oscillators. The tube standing on its air cooling fins is a 100 watt plate dissipation tube, the 2C39, which functions well in 432 and 1296 mc transmitters. Some of the improved versions of this tube are used in transmitters shown in other chapters. Sometimes the tuning capacitors become a disk or pair of disks with variable air gap, or a piece of spring brass plate near a flat plate line. The inductances instead of being large copper tubing coils become hairpin shaped things, or flat plates of metal, or squat large coaxial line sections, or even a cavity of air surrounded by metal plates or boxes.

This means that the amateur interested in building his own transmitters, may be able to do so economically and do it with simple tools and a clamping vise. The results may not always be beautiful, as can be easily seen in some of the illustrations of gear built by the author. However, the results may be very good.

Often the amateur is a year or so ahead of the market on finished antennas especially for the higher frequency bands. His home-built antennas, usually a little askew here and there, still may give results superior to anything he can buy complete at the time. The large backyard at W6AJF is complete with at least 10 to 12 VHF beam antennas on TV masts and a space known as the graveyard for old antennas and parts of antennas, useful for parts for future beam antennas.

In the receiver department, a good new or old communication receiver is still the heart and most expensive part of the complete receiving equipment for any VHF band. However, when it comes to converters, preamplifiers of the tube or parametric diode forms, the amateur can still build his own with considerable advantage to himself. This handbook has been written with these viewpoints in mind.

73, Frank, W6AJF

1

VHF Radio Propagation

THIS is a subject upon which any writer can be easily carried away and write many pages which may be dull reading for the average amateur interested in VHF operation. For this reason, a long discourse on the subject will be avoided and only a few pertinent factors, which could be very mystifying in their effects on everyday communication in the different VHF bands, will be discussed. The amateurs and engineers seriously interested in radio propagation theory should refer to the many excellent books covering this subject and to the material published in various radio magazines during the past few years.

1.1 50 MC Propagation

This band of frequencies is subject to several effects which make it an interesting one for amateurs interested in either local or long distance communication. During the peak years of sunspot activity the *F*-2 layer in the ionosphere is affected intensely, and good communication of distances of 2000 miles or more are possible with simple antennas and small transmitters and receivers. These periods generally occur during the winter months in the daylight hours and do not occur regularly every day. The sunspot activity follows an eleven year cycle with the last maximum in 1957-58. These results produce some long distance openings over a period

of several years with the best occurring during or near the peak year. The length of band opening and area affected can be increased somewhat by using large beam antennas, high power transmitters and good selective receivers with low noise input circuits. In some locations, the man-made noise levels may cancel out the benefits of low noise design in the receiver. Ignition, power line noises and industrial electrical noises can be limiting factors in both local and long distance work in the 50 mc band.

Another long distance effect takes place over distances of a few hundred to about 1200 miles by means of sporadic *E* masses or clouds which form unexpectedly and may move around rapidly. This intense ionization cloud is at a lower height above earth so the distances are less than with *F*-2 layer reflections. However, sporadic *E* clouds may form in lines which permit double or occasionally triple hops in the skip distances. This means that stations, if on the air, may be heard at distances of 800, 1600 or 2400 miles, with nothing from stations in between these distances. The sporadic *E* clouds may be very small or large in area, so it is quite possible for a station perhaps 1000 miles away to be readable, and others in that state 50 or 100 miles away to be inaudible.

Sporadic *E* communication is better during morning and early evening hours with peaks during the early summer months. It is well named "sporadic" since it is unpredictable and may last a few minutes or a few hours in nearly any direction. The signal strength, even with low powered operation, may be great enough to block out local stations a few miles away, and provide many an amateur with a real thrill in operating in this interesting band.

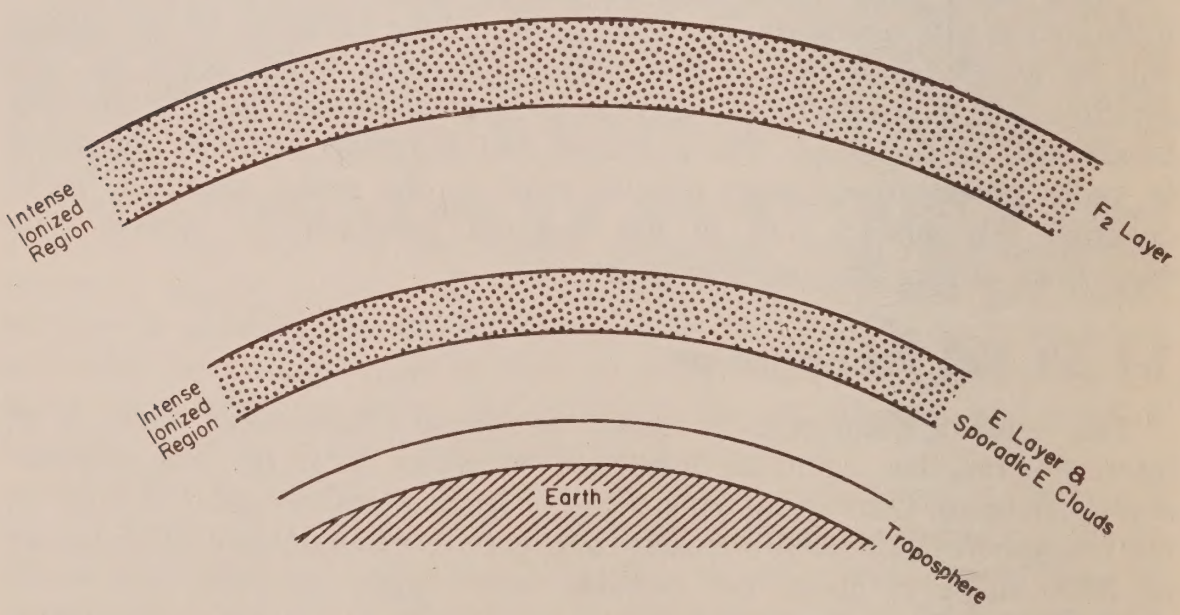

Fig. 1.1—Relative areas above the earth which are important for VHF propagation of signals over long distances between points on the earth's surface.

Another unusual effect takes place occasionally in the 50 mc band which permits c.w. communication since the signals are usually weak and fluttery in their characteristics. It is known as "back scatter" since the reflecting areas of intense ionization may often be at very large angles or even in the opposite direction to the station being heard. In the latter case, one station or the other can tell by his beam antenna heading whether it is weak sporadic *E,* direct path, or "back scatter" indirect path.

The passage of random meteors through the atmosphere very often leave an ionized trail for a short period of time which will reflect signals back to earth over the same distances involved in sporadic *E* communication. During meteor showers, which occur regularly several times a year, these effects build up enough to allow fairly good c.w. operation, or at least an exchange of signal strength information.

Other effects take place in this band which are less noticeable and therefore will not be discussed here. For local communication, signals may still have some fading characteristics caused by reflections from the earth cancelling or aiding the direct signal, or reflection from objects such as airplanes in or near the path. Reflections from hills or large buildings may produce multi-path conditions which result in fading signals sometimes even with audio distortion results. A great amount of local amateur communication is over short distances of 10 to 100 miles which are not line of sight. Sometimes the fading effects are more pronounced than at other times due to tropospheric effects which may affect even this relatively low frequency VHF band.

1.2 144 MC Propagation

This band is especially popular for local work since the equipment is fairly simple in design and man-made noise is less than at 50 mc in general. The antennas are smaller for equally effective ranges. Communication is fairly easy over obstructions such as hills, if the stations are not too close to the base of a mountain or hill. The obstruction produces a shadow effect in the radio path, but a little distance beyond, a knife-edge diffraction effect may actually aid in the received signal strength. This applies to the VHF bands where the stations are within "local" path ranges of up to 100 or 200 miles but not within optical or visual range. Hills or objects on them sometimes can be used as passive reflectors to receive signals not readable on the direct paths between the transmitting and receiving stations. Many amateurs living in valleys or ravines use this means to work other 144 mc stations which may be as close as 10 miles away airline distance but quite shadowed on the direct path.

Nearby objects such as power or telephone lines, houses, and trees adversely affect signals. The antenna should be as high above these obstructions as possible for best results. At about the maximum line of sight distances, doubling the height of an antenna may increase the signal by as much as 6 db, an S point on the average receiver tuning meter.

Long distance 144 mc stations can be worked occasionally by means of aurora reflections in the more northern or southern latitudes of the earth. These aurora effects result in irregular reflections necessitating c.w. operation. Even the c.w. signals sound quite differently with more of a hiss than a tone. Distances of several hundred miles can be covered by this means which do not always coincide with the visible aurora by as much as a few hours. Usually antenna bearings are more or less towards the aurora, north in the northern hemisphere.

Meteor showers with the attendant meteor trails of ionization will reflect 144 mc signals back to earth for short bursts or intervals. C.w. operation permits "contacts" with other states within a 1200 or 1400 mile radius during some of these meteor shows. The effects usually peak up during the very early morning hours and requires some loss of sleep and first class c.w. operation to add new contacts by this means. The signals are weak so good receivers and high power transmitters are needed. The useful ionized trails are about 60 miles above earth. Antennas are usually tilted a few degrees above the horizon, especially for distances of 600 to 900 mile contacts.

The most prevalent effect for moderate distance work is by means of tropospheric bending or refraction which takes place within a few thousand feet of the earth's surface. When the air at a certain height is warmer than that near the earth, a temperature inversion is taking place which may refract VHF radio waves back to ground. At the time of temperature inversion, the water vapor density change is correlated, which produces humidity ducts for VHF waves. These are more often effective in producing very strong signals in the 30 to 100 mile range and extending weak signal ranges than pure temperature inversions. However, either or both effects are often present especially during summer months or periods of low wind velocities. High wind velocities produce enough air turbulence to break up these ducts. These ducts are usually known as temperature inversions even though the main radio benefits may be from humidity ducts since the latter are usually dependent on temperature inversions.

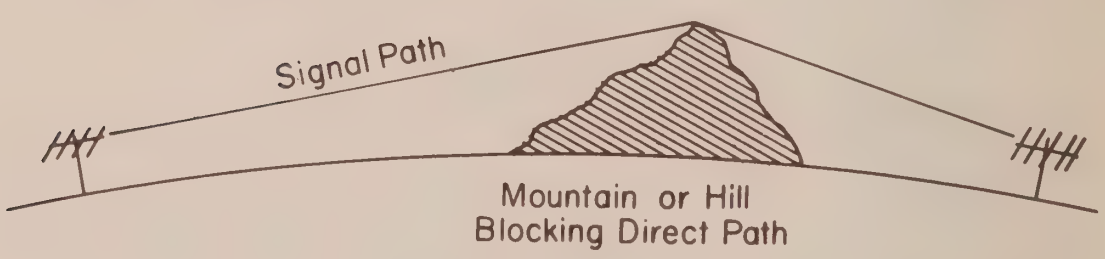

Fig. 1.2—Knife-edge diffraction effect found to be useful in VHF communication.

Radio "ducts" are of two main classes. One duct is between layers of air and so are not of much use or nuisance to ground stations. The other has as its boundaries, the earth and an air layer a few hundred to a few thousand feet high. This type of duct is very effective for VHF and UHF operation. Ducts of this type may be effective for only 50 or 75 miles in some localities but, in others, may extend several hundred miles. It is probably responsible for 144 and 220 mc contacts between Southern California and the Hawaiian Islands, a distance of about 2500 miles. This area is especially favorable for extremely long distance tropospheric radio conditions under certain weather conditions.

1.3 220 MC Propagation

This band has propagation characteristics somewhat similar to those encountered at 144 mc. Auroral conditions are probably not as good or as frequent, and meteor shower communication should be more difficult. Tropospheric propagation should be a little better over similar paths and weather conditions. Local contact work should be comparable to 144 mc work except that present day television receiver tuning oscillators clutter up much of this band illegally, making it difficult to hear signals in some localities.

Amateur "moon-bounce" signals offer better possibilities at 220 and 1296 mc than at 144 or 50 mc since very high gain and highly directive beam antennas are not so bulky in size. The moon reflected signals in these bands are more possible than on 432 mc because of the 1000 watt and 50 watt power limitations for the two bands.

1.4 432 MC Propagation

Extended line of sight communication on this band should be comparable to 220 and 144 mc with somewhat more difficulty from absorbing and reflecting surfaces or objects in or near the radio paths. Tropospheric propagation should be better than on the lower frequency bands. However, power limitations and less effective receivers, together with more reflector obstructions may offset this advantage. Sporadic *E*, meteor shower and possibly auroral propagation effects would probably be of no value at this frequency.

1.5 1296 MC Propagation

This band has similar problems to an even greater extent. Trees, buildings, power line equipment, etc., can produce very bad shadow and reflections. Tropospheric openings should be possible for distances of a few

hundred miles in very good locations but not in the average amateur's station location. Radar type signals can be a very real problem in parts of this band, but line of sight communication functions very well with highly directive antennas carefully oriented in the correct direction.

2

Antennas

2.1 Discussion

ANTENNA SYSTEMS for VHF service are usually either vertically or horizontally polarized with respect to the surface of the earth. Cross-polarization is not useful except in relatively rare cases. Circular or elliptical polarization has been advocated but unless it is used at both transmitting and receiving ends, there is a 3 db loss to be subtracted from the possible total antenna gain figures. High gain antennas are useful for increasing the VHF range in distance, in minimizing multi-path and fading conditions, and in reducing the effects of some local noise source. The latter takes place because of the directivity of beam antennas. The null responses can often be used to reduce noise or even signal QRM interference.

A large antenna system intercepts more wave energy in space and so means more signal strength into the radio receiver. VHF receivers, in general, are limited in sensitivity by internal noise levels. Therefore weak signal reception normally depends upon the antenna system. A large antenna for any given band of frequencies means greater directivity and this is sometimes a disadvantage for the operator. In net station operation where the other stations may be in many different directions, a simple non-directional antenna, as high as possible, is more useful than a beam antenna.

A nearly universal rule in VHF antenna design is to have small antennas or small beams as high as possible above ground, and large beam antennas high enough to clear all nearby objects by two or three wavelengths at that

band of frequencies. This is usually possible in the higher bands but not easily accomplished in the 50 mc band. For distances out to the horizon or somewhat beyond that, doubling the antenna height will increase the signal approximately one S point at the receiving station. This rule does not apply to very hilly locations or for extremely long distance operation by other than direct path conditions. Reference should be made to antenna handbooks and engineering texts for additional information.

2.2 R.F. Transmission Lines

Before showing typical antennas for the various amateur VHF bands, a brief word should be included on transmission lines since these are essential for connecting to the transmitters and receivers. All r.f. transmission lines have losses by heat and radiation. Often these effects are increased by the presence of excessive standing waves of r.f. voltage and current in the line to the antenna. Fortunately this can be controlled by careful match of impedances between the transmission line and the antenna. S.w.r., standing wave ratio, indicators are not expensive or difficult to construct and should always be used in adjusting a new antenna and as an occasional check from time to time. Examples of s.w.r. meters are shown in the chapter on test instruments.

Transmission lines of several types, which are readily available, are shown in fig. 2.1. Coaxial lines with the outer conductor grounded do have some advantages. There is less radiation loss and the presence of the mast

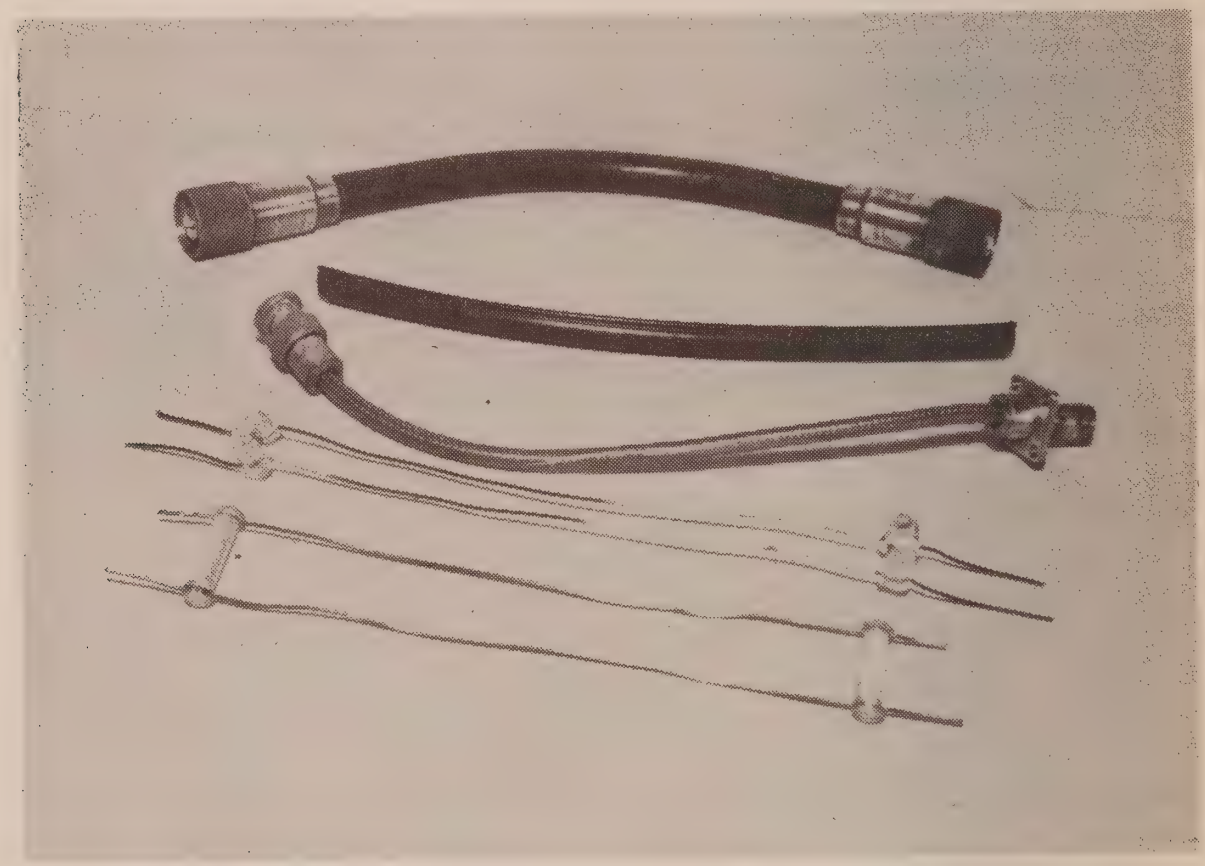

Fig. 2.1—Types of VHF antenna feed lines and fittings.

guy wires have no effect as in the case of two wire balanced lines. However, coaxial lines have more dielectric losses and so are not suitable for long runs of more than a few wavelengths. Large diameter coaxial lines are better since the losses are less than with small lines and their maximum power handling abilities are greater.

Open wire or balanced transmission lines are desirable for line lengths of more than 5 or 10 wavelengths if they are rigidly supported and are free of sharp bends. These requirements are essential since s.w.r. changes are very undesirable in either transmitting or receiving. Any wind sway or change of spacing in relation to other objects may offset open wire line advantages and less actual loss may result with coaxial lines even for lines of 20 or 30 wavelengths. A wavelength in free space is nearly 20 feet at 50 mc and 2 feet at 432 mc. A wavelength along a transmission line is less since the presence of supporting dielectrics slows down the velocity of propagation. Coaxial lines with solid dielectric have a figure of approximately ⅔, tubular and flat twin lead 300 ohm lines range from .8 to .85 and open wire lines with insulators 6 inches apart run from .95 to .975.

All transmission lines have a characteristic impedance which must be matched as closely as possible to minimize s.w.r. losses. Coaxial lines are made with impedances in the range of 50 to 100 ohms. Twin lead, flat or tubular types, is made in 75, 150 and 300 ohm sizes. The 300 ohm tubular type with polyethylene foam filler inside is very useful for amateur work even up to 1296 mc since it is less subject to moisture changes than flat twin lead. A single broken strand in either side of the line will greatly increase losses. This means relatively short life when used with a rotating antenna. Coaxial lines with their solid center conductor are better in this respect.

Two wire lines spaced ½ or 1 inch apart have impedances of slightly less than 400 ohms up to 450 ohms. Larger spacings result in excessive radiation losses in VHF work. Engineering handbooks have tables of line losses per 100 feet of length, characteristic impedances, capacity per foot and other pertinent data on all kinds of transmission lines which have been briefly described in this section.

2.3 Types of Antennas

The simplest antennas for VHF operation are dipoles and ground-planes. The latter consist of a quarter wave rod or tube insulated from the supporting mast, and several rods extending out a quarter wavelength around the mast in a horizontal plane, or drooping downward. These elements, three or four in number, are connected or solidly mounted to the mast and the outer conductor of a coaxial line is connected to them at this point. The inner conductor connects to the lower end of the quarter wave whip or rod. A simple horizontal ground plane antenna with vertical whip has an impedance of about 25 ohms which would produce a 2 to 1 impedance mismatch with a 50 ohm coaxial line feeder. This impedance can be raised to about 50 ohms by drooping the "ground" radials downward at perhaps 45° for a good impedance match.

Simple dipole antennas consist of two similar quarter wave sections fed in the center. This antenna lends itself better to horizontal polarization but

should be fed with a balanced r.f. transmission line in either polarization. The impedance at the current maximum, or center of the dipole, is usually between 50 and 100 ohms, depending upon the length to diameter ratio of the antenna element. The presence of other elements in the field around this antenna will greatly modify the impedance and radiation resistance value. A dipole antenna is used as a reference antenna when measuring or calculating the gain of beam antennas. The latter often consists of additional dipole antennas connected together so that the radiation from each dipole will add in the desired direction.

Folded dipole antennas consist of two dipoles, one connected to the transmission line and the other close-spaced to the driven dipole with the ends connected together. The field pattern and gain is the same as a single dipole but the presence of the second dipole changes the input impedance at the point of connection to the transmission line. It is a very useful device for impedance matching, particularly in Yagi antennas. The curve sheet fig. 2.2 may be used to design folded dipoles so as to match the antenna

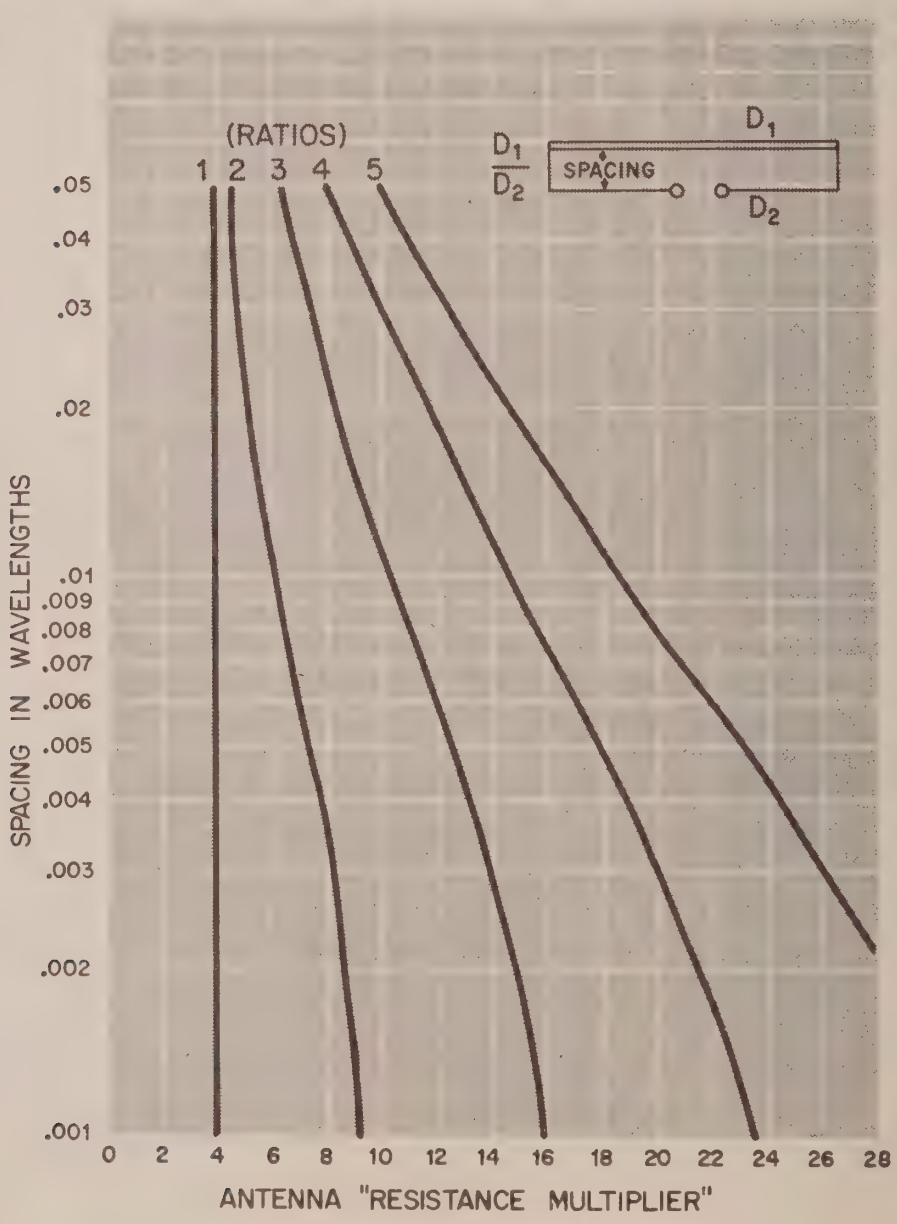

Fig. 2.2—Design curves for matching folded dipole impedance to transmission lines. The numbered lines represent the ratios.

impedance to a transmission line. For example, a long Yagi array might have an antenna impedance of 20 ohms at the center of the driven dipole. In order to raise this impedance to some value such as 300 ohms, two different sized dipoles correctly spaced, will provide a "resistance multiplier" of 15 so that the feeder terminals would appear to be 15 × 20 = 300 ohms. From the curve sheet fig. 2.2, a 4:1 ratio of dipole diameters spaced .009 wavelengths or a 5:1 ratio spaced .02 wavelengths should provide the desired multiplier. If this dipole was used in the 144 mc band, the .009 wavelength would be a little less than ¾ inch, center to center spacing. A 4:1 ratio of diameters might well be a ⅛ inch diameter driven element and ½ inch diameter for the other element in the folded dipole.

The wavelength of any desired frequency is $\frac{11{,}800}{F_{mc}} = L$ in inches. F_{mc} is the frequency in megacycles. The chart in fig. 2.3 may also be used for this purpose of converting wavelength fractions into inches for various frequencies for which the curve sheet diagonal lines are drawn. This chart or

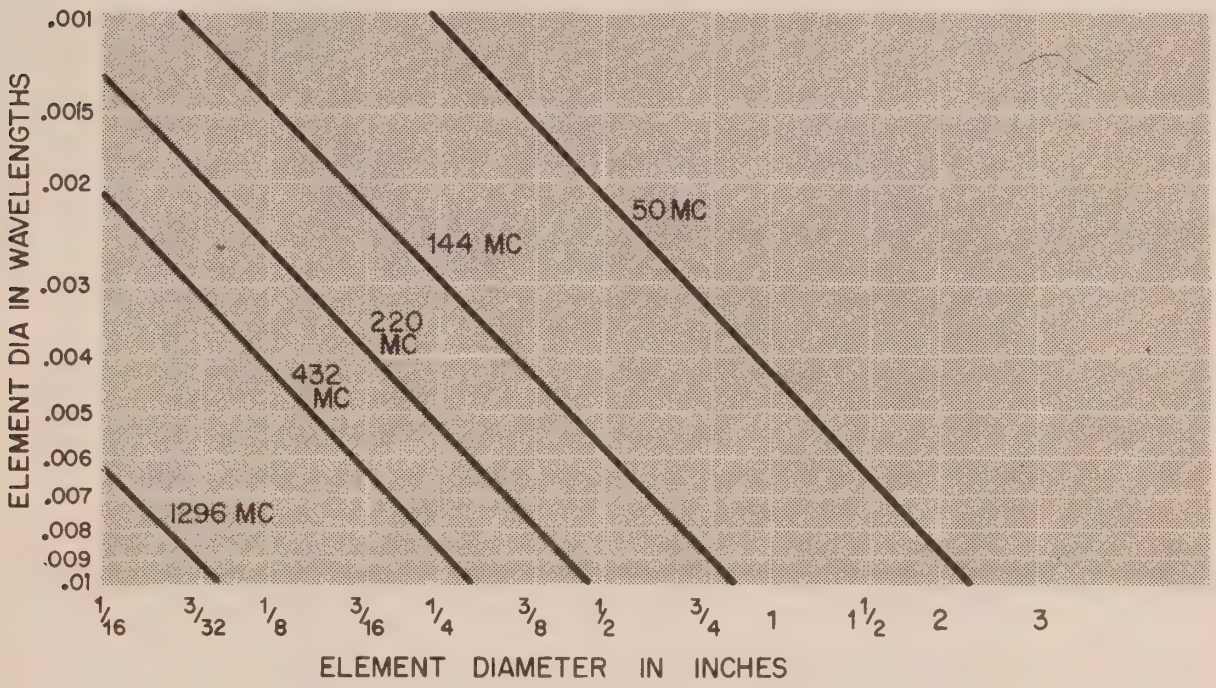

Fig. 2.3—Antenna element conversion chart for changing element diameter wavelengths to inches.

curve sheet is also useful in designing VHF antennas since the end and center impedances are proportional to the element diameter in wavelengths. The physical length for half wave resonance is also a function of this same figure. A ¼ inch diameter element would be considered a fairly large size for 144 mc and excessively large at 432 mc. The electrical length more nearly approaches the physical length for "thin" elements which usually means less "cut and try" in building a beam antenna with small diameter elements. Large diameter elements offer more wind resistance and in the case of directors in a Yagi array, mean a change in spacing requirements for best gain characteristics.

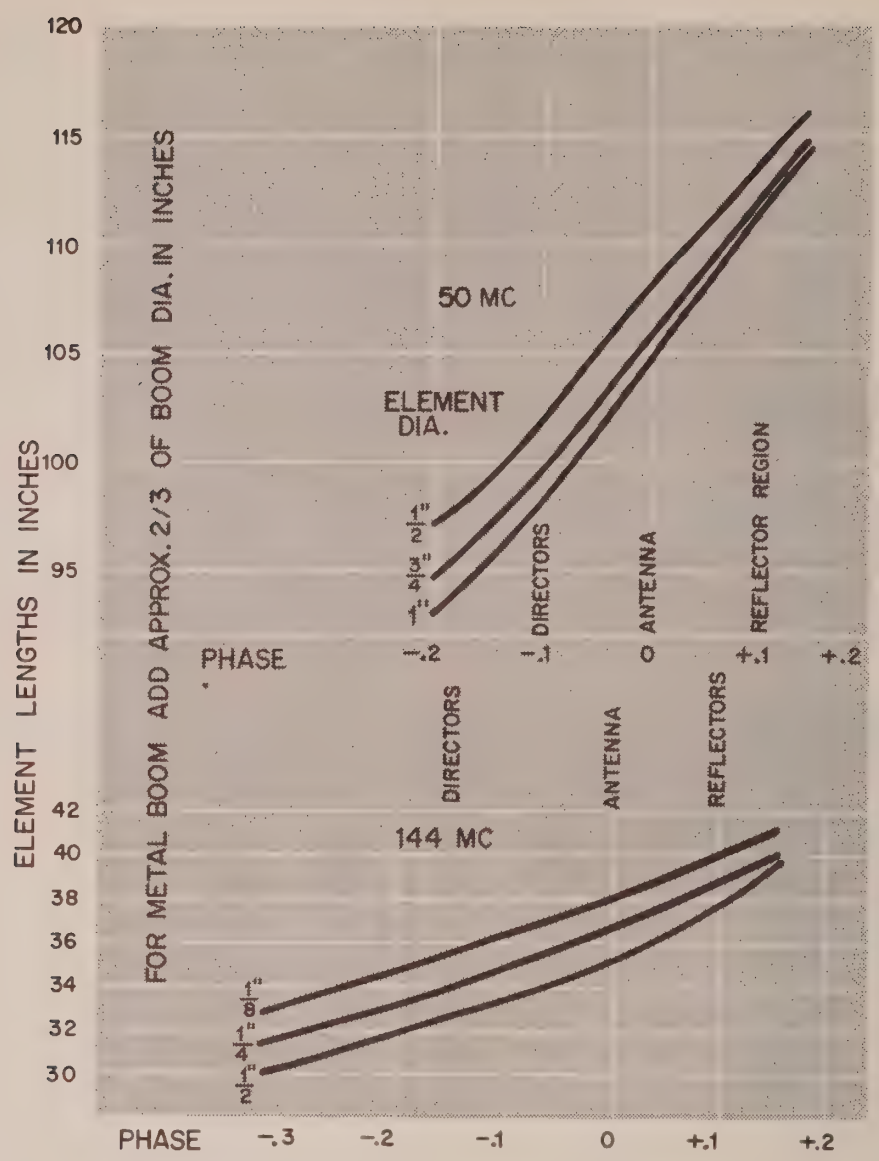

Fig. 2.4—Element length in inches plotted against phase for various element diameters in the 50 and 144 mc bands.

The curves shown in fig. 2.4 and 5 may be used for the different VHF bands, on up into a part of the UHF spectrum. In these curves, data has been collected for different diameter elements for each amateur band, using diameter values which might be of practical use in center mounted dipoles, reflectors and directors. Reflectors are longer than resonant half wave dipoles in order to have an inductive reactance and reradiate the energy back towards the antenna element. Directors function with a capacitive reactance and radiate most of the induced signal away from the direction of signal source such as the driven antenna element when transmitting, or the incoming signal when receiving.

Yagi beam antennas use both directors and reflectors with a driven dipole or folded dipole antenna. A simple Yagi antenna would consist of a reflector, a driven element and one or more directors in line, with all elements vertically mounted for vertical polarization, and horizontally for horizontal polarization. Large arrays may use two, four or eight simple Yagi

beams with the driven elements connected together with phasing transmission line sections. The purpose is to increase the forward gain in transmitting and intercept more signal energy in space when receiving.

Curtain type antenna arrays consist of numerous driven dipoles with phasing lines, backed up by a reflector system spaced from .1 to .25 wavelengths from the driven elements. The reflector usually consists of a resonant reflector element directly behind each driven element. In some cases it may be a solid sheet, a wire screen, or close spaced "longer" reflectors to simulate a solid screen behind the driven elements. Many amateurs have found by experience that curtain type arrays produce more gain in the VHF bands than were obtained with simple long Yagi arrays.

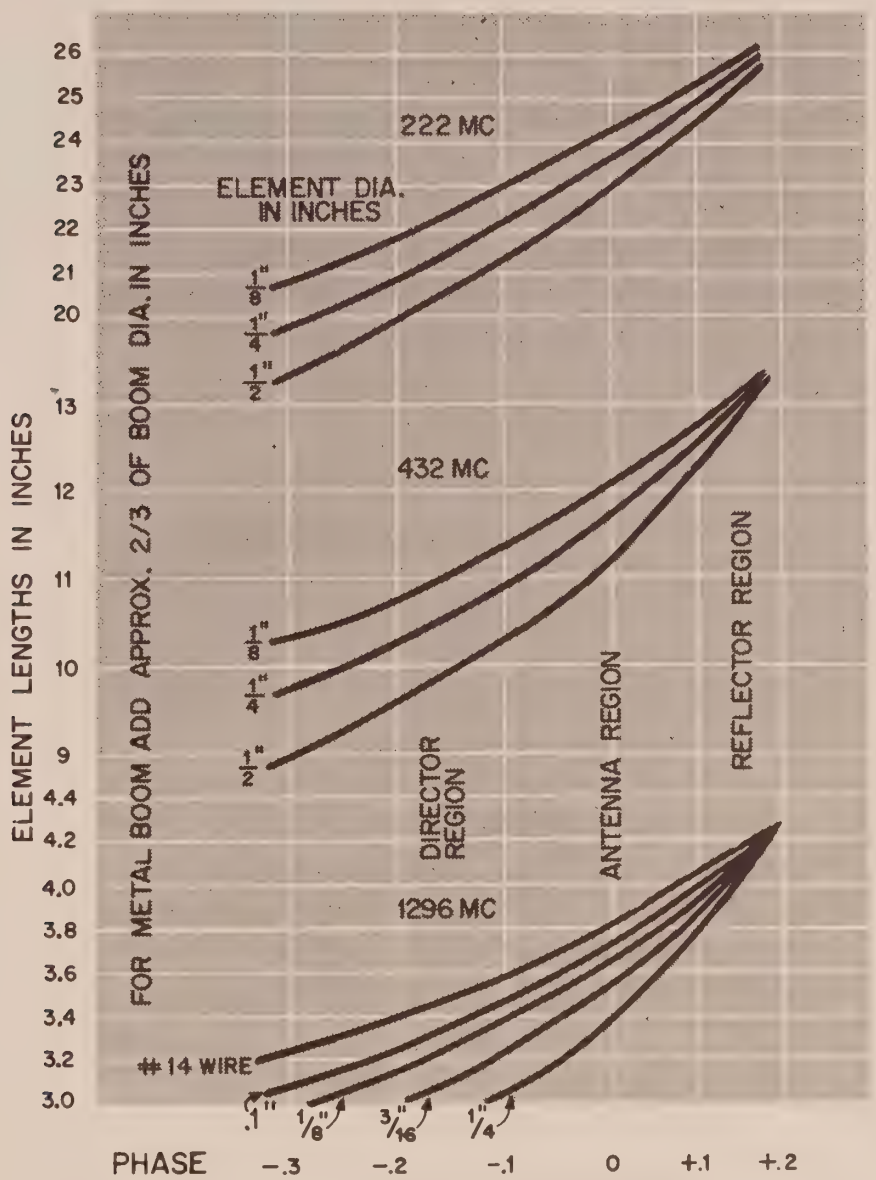

Fig. 2.5—Element length in inches plotted against phase for various element diameters in the 222, 432 and 1296 mc bands.

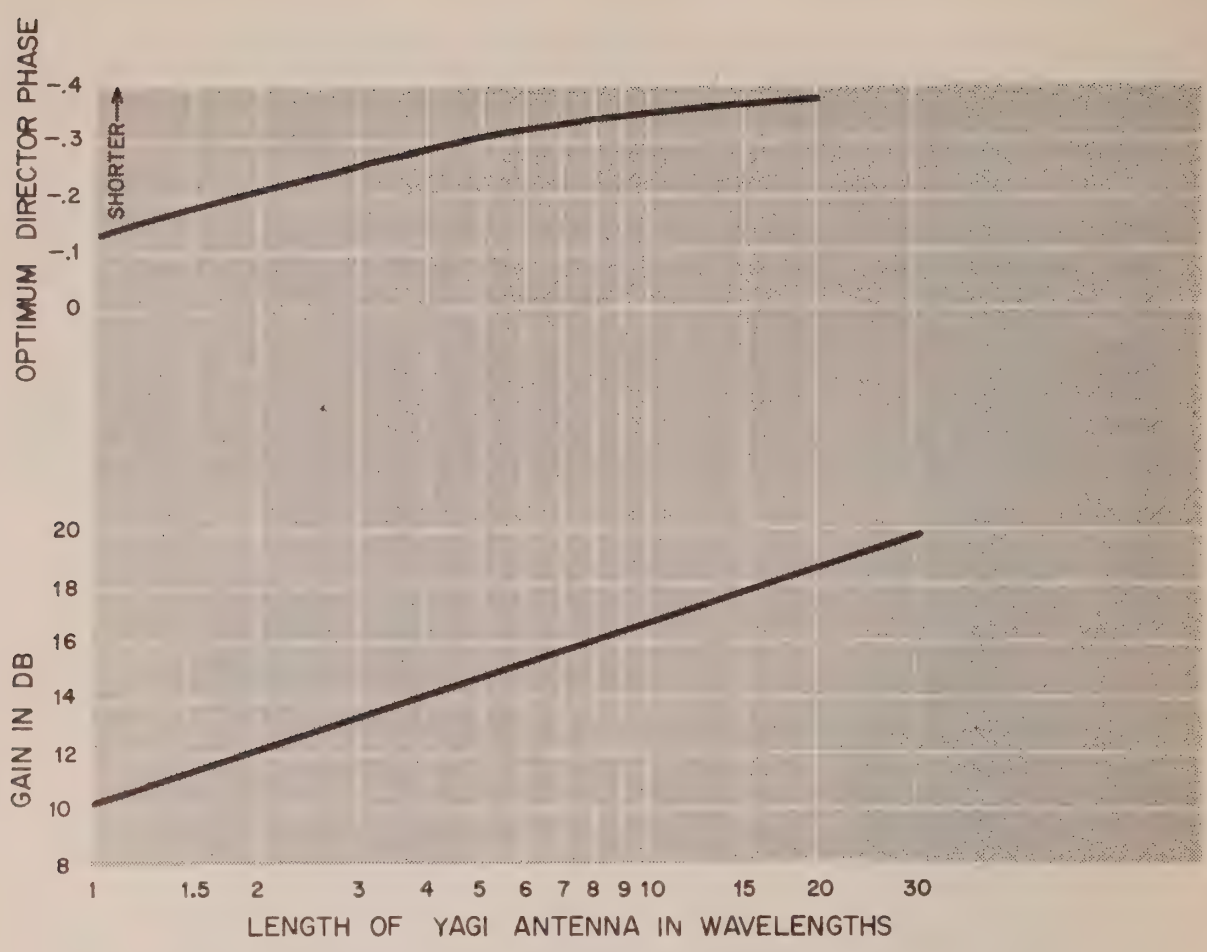

Fig. 2.6—Long yagi design chart.

The long Yagi antenna design chart in fig. 2.6 may be used with the curves of fig. 2.4 and 5 to design large sized antennas of high gain. The upper curve of fig. 2.6 gives the optimum element phase for Yagi antennas between 1 and 20 wavelengths in total length. From this data the element lengths can be obtained from figs. 2.4 and 5 for different element diameters. Note that these dimensions are for use in non-metallic booms. Metal booms are very desirable for structural reasons and since the diameter in each case depends upon the total length of each boom and the strength required, no constant correction factor on element length is available. The usual procedure is to add ⅔ of the boom diameter to the total element length if the element is mounted directly through the center of the round boom. For example, if a small boom ¾ inch in diameter is used with the array elements in center mounting, about ½″ should be added to the total length of each element.

The lower curve in fig. 2.6 is my reference curve for actual gain to be expected using the design data presented in all these curve sheets. Long Yagi arrays cannot be scaled down in dimensions very easily so the actual gain values may fall far below this curve unless the antenna is correctly designed for the frequency of operation. The basic design of very long Yagi antennas has been worked out by Dr. D. K. Reynolds and his ideas have been used in the design data shown in this chapter. Measurements on very long Yagi antennas at 432 mc have always seemed to prove the benefits of short, closer spaced directors as compared to long wider spaced directors. In some

designs, the front half of the long Yagi can be cut off or removed, and the field strength measurement will show an increase rather than the expected decrease.

2.4 50 MC Antennas

An average type of 50 mc beam antenna is shown in fig. 2.7. It is a four element Yagi beam with one reflector, a driven element with gamma matching device, and two directors on a 12 foot boom. The antenna in the illustration has a bearing at the center and a pair of ropes for changing the tilt angle above the horizon over a limited angle of rotation around the mast. This was done for some tests at W6AJF, and normally this beam would be mounted permanently in a horizontal plane as shown in the same type of

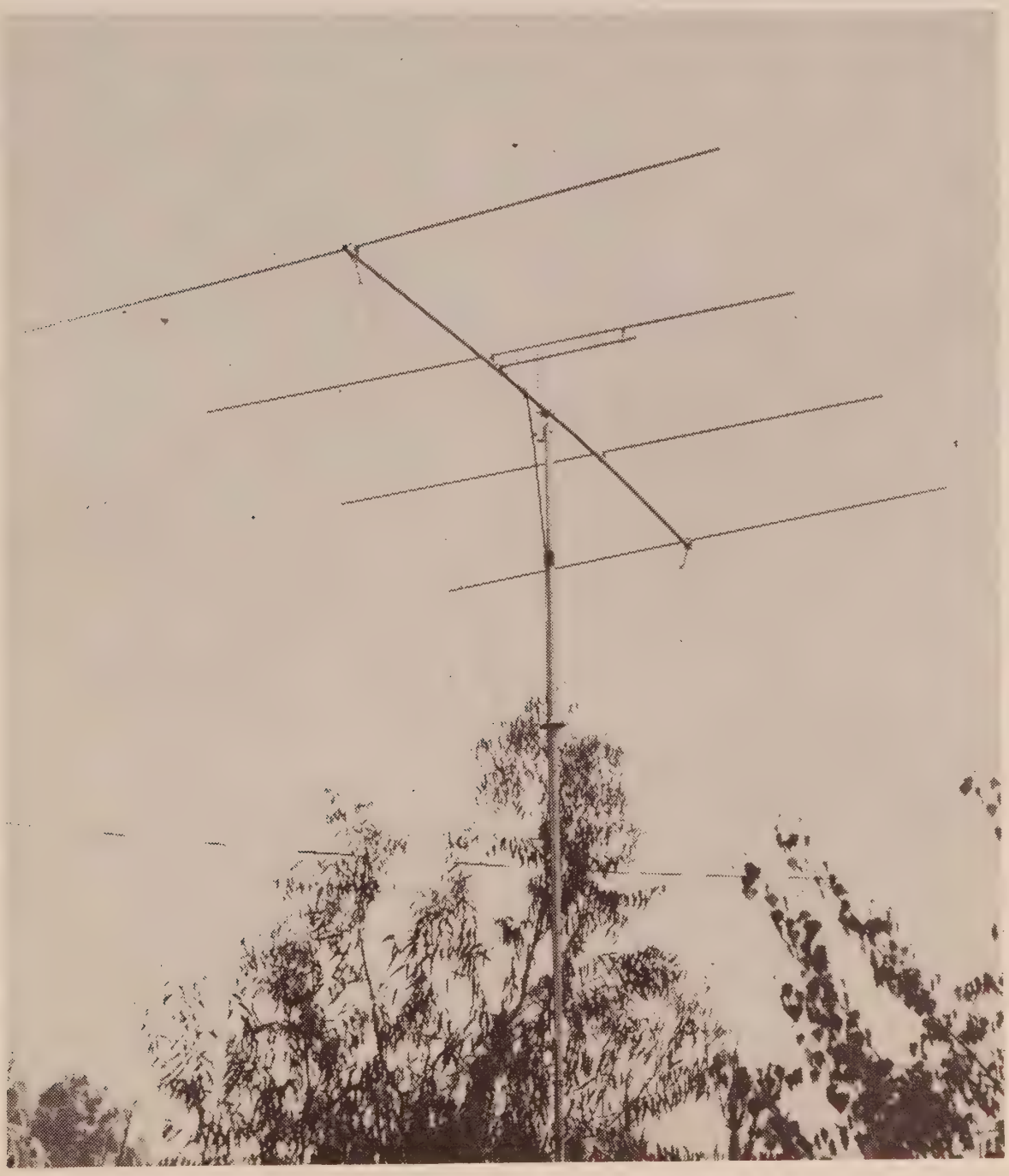

Fig. 2.7—Average 50 mc beam with tilt arrangement.

50 mc antenna illustrated in fig. 2.8. The latter has a 145 mc vertical Yagi built into the same boom in order to conserve yard space. All the antennas illustrated in this chapter have been in use at W6AJF during the past year. Occasionally there has been a shortage of television type telescoping 30 and 40 foot masts and yard space.

The essential dimensions of this type of four element Yagi for the lower part of the 50 mc band is shown in fig. 2.9. This is a short Yagi, less than one wavelength in boom length, so the design values of fig. 2.6 do not apply. The curves of fig. 2.4 are useful by assuming that the director phase should be not more than .1 in value. In short Yagi design it is customary to taper the lengths of each succeeding director approximately one per cent with the longest director nearest the driven dipole or antenna element. The

Fig. 2.8—A 144 and 50 mc combination beam. The 144 mc beam is vertically polarized.

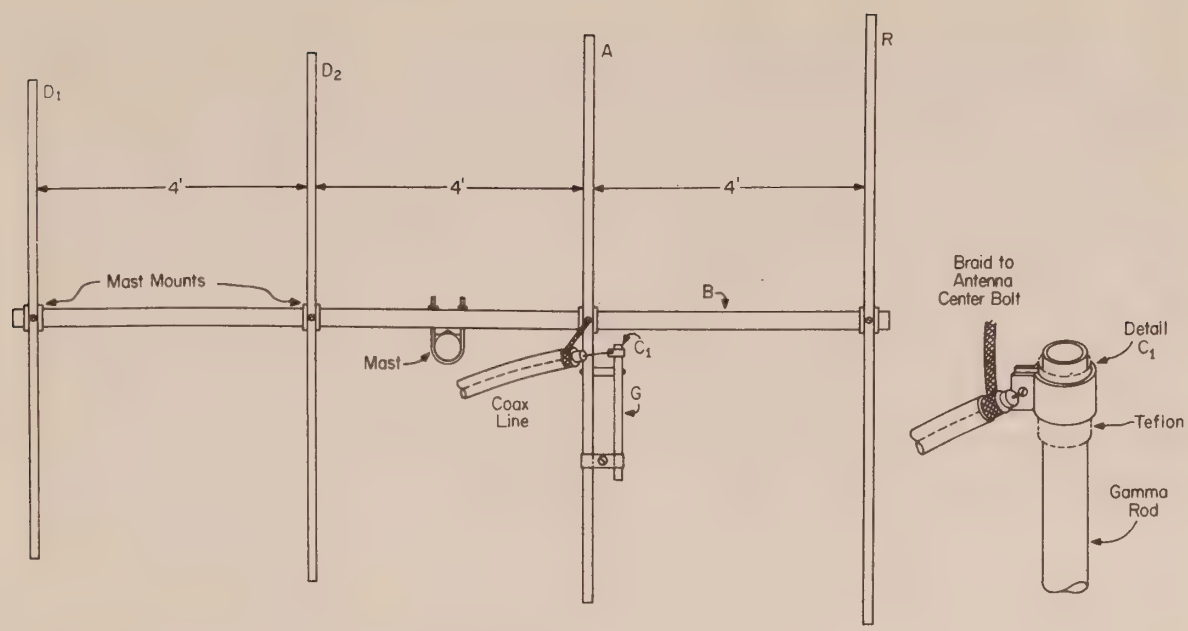

Fig. 2.9—Dimensions of a gamma matched yagi for the lower part of the 50 mc band. Details of the gamma match series capacitor are shown.

D_1—100", ¾" diam.
D_2—102", ¾" diam.
A—106", ¾" diam.
R—112", ¾" diam.
B—12', 1¼" diam.
C_1—Aluminum clamp, ¾" wide over 3 wraps of 5 mil teflon insulation.
G—Gamma match rod, 2½' long × ¾" diam.

gamma match to a 50 ohm coaxial transmission line consists of a 30 inch length of antenna element tubing suspended from the driven dipole by means of a short ceramic insulator a few inches from the boom, and a slider metal clamp towards the end of the gamma match rod. The outer conductor or braid of the coaxial line connects to the center of the driven dipole (which is the mounting point in or on the supporting boom). The center conductor of the line connects through a series capacitor to the gamma match rod or tube. This capacitor is made by wrapping three turns of 5 mil teflon sheet about 1 inch wide around the near end of the gamma rod. This is clamped in place with a piece of sheet aluminum about ¾ inch wide, using a machine screw to pull it up snugly around the teflon insulation. The same machine screw acts as a terminal for connection to the coaxial line inner conductor. The capacity of this capacitor arrangement can be varied by changing the width of aluminum strap or by sliding this ring slightly beyond the end of the gamma rod (capacity decrease). The other gamma adjustment is the rod length to its direct connection to the antenna element. The far end sliding metal strap is used for this purpose. Both "inductance" and "capacitance" values are a function of the antenna element diameter, the gamma rod diameter, which may be smaller, and the spacing between the two. Fortunately, nearly any combination will tune up properly when using an s.w.r. meter in the coaxial line. Minimum standing wave ratio indicates a good match to the antenna when this ratio is near unity. Even a small mismatch, as indicated by a reading of 1.5 to 1, will not appreciably increase

the transmission line loss. Once the two sliders are at the point of minimum s.w.r., both can be tightened up and sprayed with clear antenna lacquer. This gamma match device has weathered two years of wind, rain, and up to 110° summer heat with a kw transmitter as the "heater." Other designs such as a smaller rod inside of the gamma rod with teflon sleeve insulation might be even a better capacitor than the clamp unit described here. The 50 mc antennas in the illustrations in figs. 2.7 and 8 both used the clamp type of capacitor but were a little different in gamma rod spacing and lengths.

A practical value of element spacing at 50 to 51 mc is around 4 feet. This value has been used in 3, 4, 5, 6 and 7 element Yagi beams over a period of 10 years at W6AJF. A home constructed 50 mc beam will cost, in new material prices, about as much as a ready made beam at the present time, but the writer is still wasting time, money and energy on home-made arrays.

2.5 144 MC Antennas

The medium sized, single 144 mc Yagi array illustrated in fig. 2.8 has 10 elements in the same boom used in a horizontal 50 mc beam. In localities where vertical polarization is used in the 144 mc band, a combination beam for two bands becomes practical. With opposite polarization, the reaction is minimized. Separate coaxial line feeders are necessary, and since these two feeders, fig. 2.8, drop down behind the reflector, there is quite a bit of weight

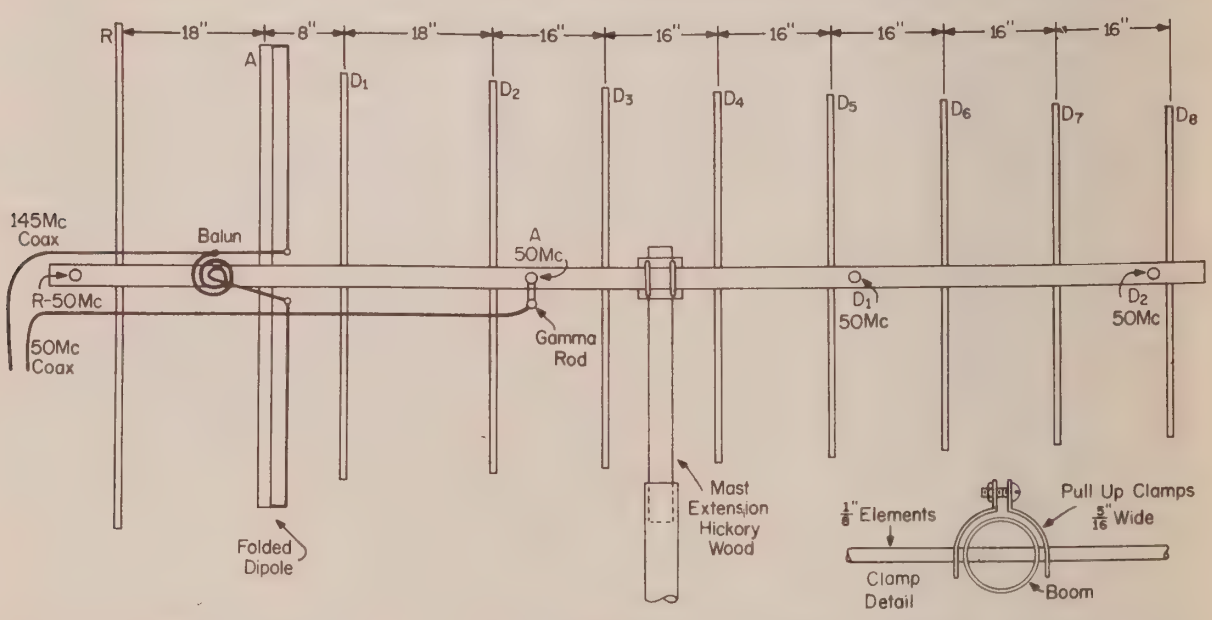

Fig. 2.10—Dimensions and construction details for a vertical 10 element 145 mc and a horizontal 4 element 50 mc yagi, all on a 12′ long, 1⅛″ diameter boom. The details for the 50 mc yagi are the same as that shown in fig. 2.9. Method of mounting elements to the boom is illustrated. The balun for 144 mc is 27″ of RG8U coiled up as a $\lambda/2$ section.

R—41¾″ long, ⅛″ diameter.

A—39″ long, ¼″ diameter with #12 wire driven element, ⅓″ separation between wire and ¼″ element.

D_1—36¾″ long, ⅛″ dia.
D_2—36⅝″ long, ⅛″ dia.
D_3—36½″ long, ⅛″ dia.
D_4—36⅜″ long, ⅛″ dia.
D_5—36¼″ long, ⅛″ dia.
D_6—36⅛″ long, ⅛″ dia.
D_7—36″ long, ⅛″ dia.
D_8—35⅞″ long, ⅛″ dia.

unbalance. A Glasline rope pulls downward from near the front end of the boom to keep the boom in a horizontal plane. Vertical 144 mc directors require good insulation in this "guy wire." The top 2½ feet of mast is a hickory shovel handle extension rammed into the steel mast. The latter would upset director tuning or operation if it extended up through the 145 mc directors to the boom. The directors were staggered or tapered in length in order to make the array cover from 144 to 147 mc. Dimensions are indicated in fig. 2.10. This gain in bandwidth, over that for normal design of medium long Yagis, means some loss in forward gain so that about 10 db is all that can be hoped for at the design center frequency.

A standard 12 element curtain with six driven halfwave elements (halfwave spacing, etc.) and six reflectors will cover a wider band and has about 11 db gain. Extended elements and spacings of a standard 8 element curtain will also have about 11 db gain. A standard 16 element curtain beam has a gain figure of 12 to 13 db. The higher figure only holds true when the beam is adjusted for maximum forward gain with rather large back lobe of radiation. A long Yagi, 20 to 24 feet long at 144 mc (narrow bandwidth design) has about the same forward gain as a 16 element curtain which is not in accordance with some other published data showing 16 db or more.

The two 144 mc band antennas sketched in fig. 2.11 were used at W6AJF for a few years but were no longer available for photographs. Once a year or so something has to come down to make room for some other antenna idea or design, and once an array is on the ground, it quickly becomes a source of

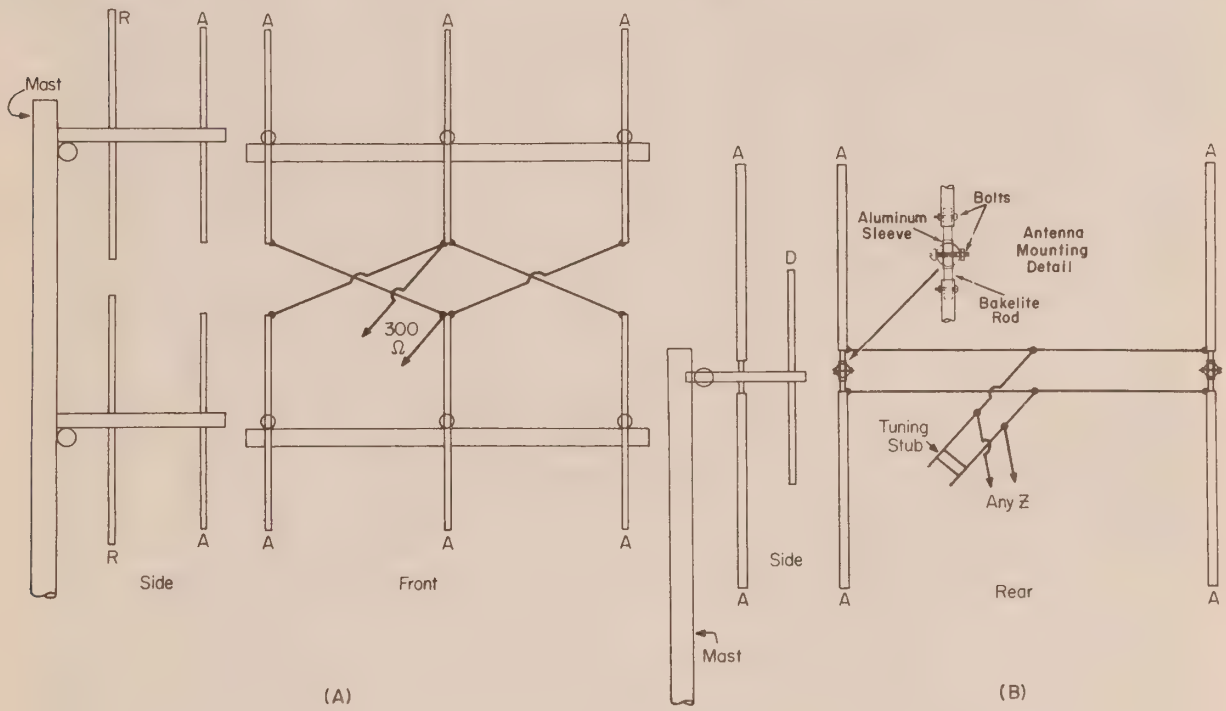

Fig. 2.11—A 12 element curtain (A) and a 6 element director beam for 144 mc. (B) The curtain beam has a gain of 11 db while the director beam has 10 db.

12 Element Curtain
R—40" long, ⅜" dia.
A—38" long, ⅜" dia.
A to R spacing—12" to 16".
A to A spacing—39".

6 Element Director
A—36" long, ½" dia.
D—37" long, ⅜" dia.
A to D spacing—6".
A to A spacing—50" to 60".

material for other projects. The 12 element beam had the edge on the 6 element director beam in bandwidth and gain. It had about 11 db versus 10 db for the director beam and would cover frequencies outside of the amateur band quite well. It appeared to have a bandwidth of 2 to 3 times as much as the writer's little favorite, the director beam. The small difference in gain was scarcely noticeable on received signals. The two antennas on separate poles often reversed their apparent received signal gain readings due to multi-path conditions. In the director beam, one director acts upon two driven dipoles in a more efficient manner than will two reflectors or two directors. It requires close spacing (with less bandwidth) and a director element longer than usual for the diameter used here. It was nearly self-resonant in the 144 mc band. Normally, directors are resonant at a frequency above the band and reflectors a little below the band. Dimensions are shown on the diagram in fig. 2.11. The exact tuning stub length must be determined experimentally as well as the balun tap points because small differences in element mounting design, spacing, etc., usually make quite a difference in stub tuning. Either antenna can be mounted for vertical polarization as shown or turned 90° for horizontal polarization.

The 144 mc horizontal beam with four Yagi antennas connected in phase as shown in figs. 2.12 and 13 has more gain than a single long Yagi on a

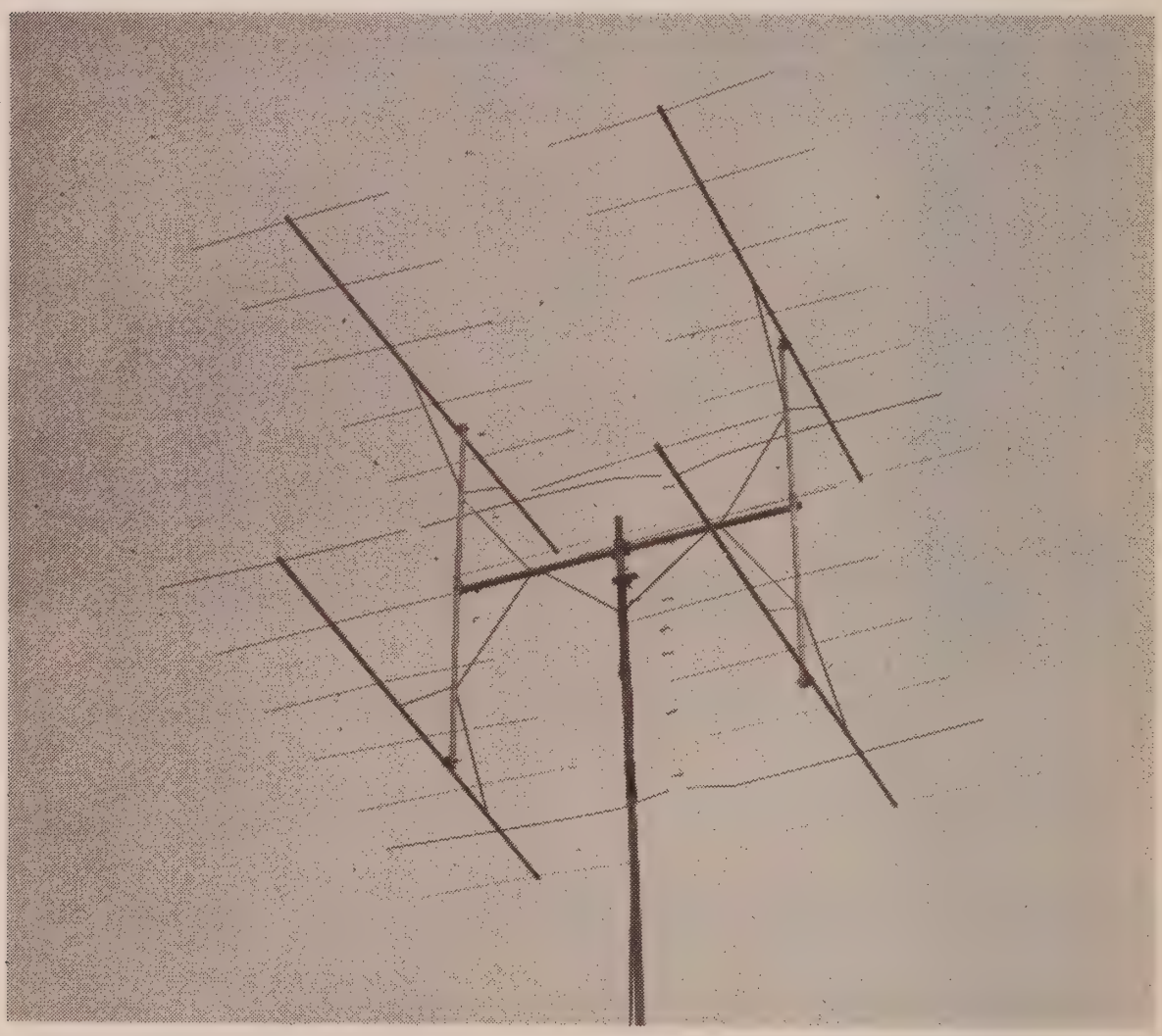

Fig. 2.12—A 144 mc beam—4 yagis connected in phase.

boom four times longer. A little more forward gain can be obtained by using more spacing between Yagi booms but this requires a more complicated feeder system. A comparison of two 220 mc beams of 4 Yagis each showed that 1 db was lost by not using more spacing between the Yagis. The wider spacing design shown in the section on 220 mc antennas can be applied to 144 mc antennas with some additional work and longer supporting booms between Yagi antennas.

The feeder system in fig. 2.13 has the virtue of greater simplicity. The driven elements are extended to about ⅝ wavelengths each which puts the adjacent Yagi antenna booms about ¾ of a wave apart. The vertical spacing of 6 feet was used because some 6 and 8 foot booms were available, with the 8 foot ones being chosen for the Yagi booms. Yagi beams of 8 foot length

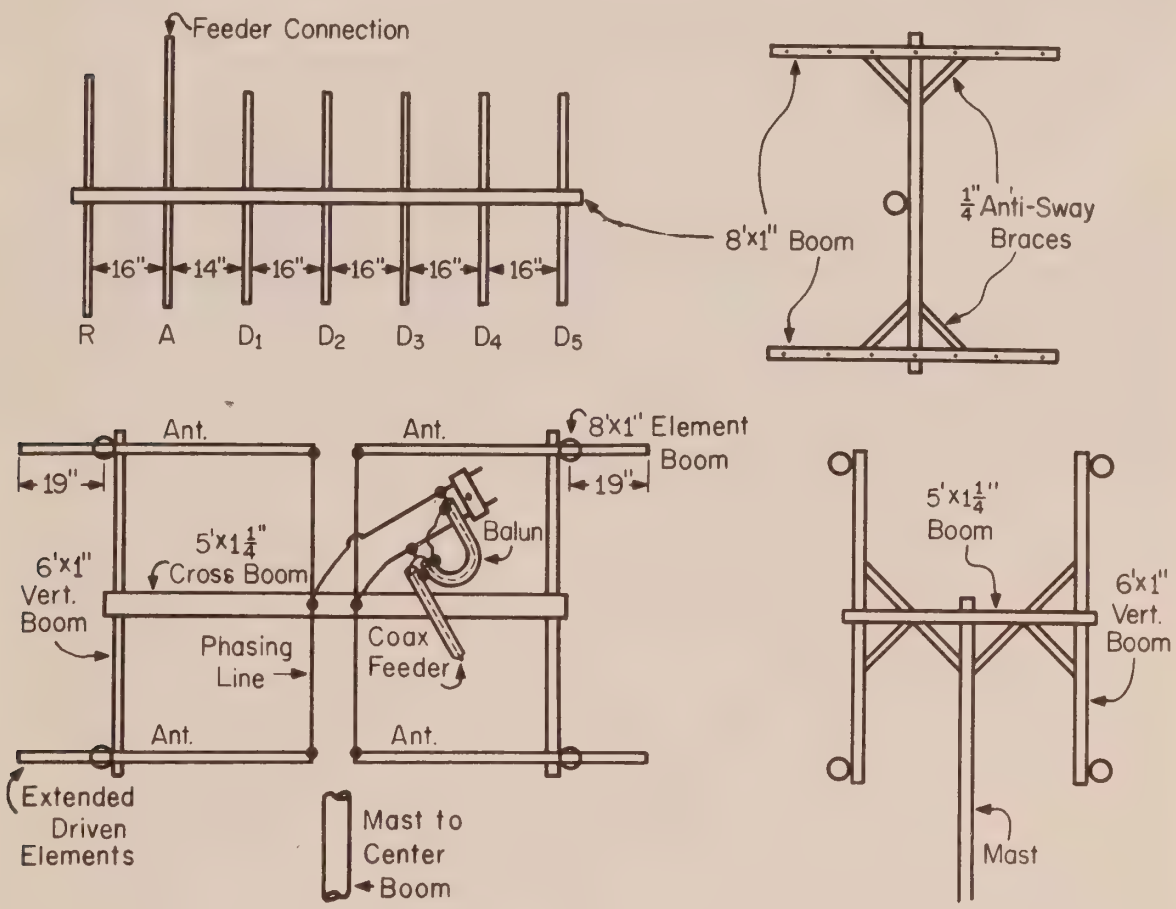

Fig. 2.13—Details and dimensions for the 144 mc 4 yagi array shown in fig. 2.12. The balun is 27" of RG11U fed by an RG8U coax line. The phasing line is #12 wire spaced 1½", 6 feet long and the tuning stub is also #12 wire spaced 1½" approximately 30" long. The balun is tapped in a few inches above the shorting bar on the tuning stub. All braces marked S are ¼" aluminum anti-sway braces.

R—41" long, ⅛" dia.
A—48" long, ¼" dia. mounted 19" from one end.
D_1—36¾", ⅛" dia.
D_2—36½", ⅛" dia.
D_3—36⅜", ⅛" dia.
D_4—36¼", ⅛" dia.
D_5—36⅛", ⅛" dia.

should be about 8 feet apart for optimum forward gain. A single phasing line of number 14 wire, spaced 1½ inches, was used to drive the four extended dipoles. At the center of this phasing line, a similar line was connected as a tuning stub to bring the entire system to resonance a little above 144 mc. This stub should be about 3 feet long with a temporary sliding short on it for tuning the system to resonance with a 144 mc grid dip oscillator (GDO). When this is accomplished, the excess stub line can be cut off and the shorting wire soldered in place. A half wave balun (27 inches of RG8U or RG11U cable) is then connected a few inches above the shorting link with an RG8U coaxial line to the station from either side of the balun. All cable braids were connected together and to the mast. The balun can be coiled up and finally taped to the mast. An s.w.r. meter is used to find the proper connection points for the balun with perhaps a very slight resetting of the shorting link. G.d.o. calibration accuracy is altered by coupling into it which may mean that the exact antenna resonance may not be correct.

This 144 mc array provided a little better signal on long distance tests than was obtained with two 24 foot Yagis which had much less than optimum vertical stacking. These two long Yagi antennas could not be spaced more than 9 feet apart on the rather flimsy TV mast because of guy wire requirements at each mast joint. Twenty four foot Yagi antennas should be at least 16 feet apart. In using this 4 Yagi array on meteor shower tests, tilts of 5 to 10 degrees above the horizon were accomplished by bowing the 40 foot TV mast by means of the guy wires. This is a good way to alarm nearby neighbors, but does work in any one direction when the operator is after a new state on this VHF band.

2.6 220 MC Antennas

The antenna elements in 220 mc beams are about ⅔ of the 144 mc lengths, so it is easier to get wider spacing between Yagi beams when using standard push-up TV masts, or a tower, rotator and single pipe extension at the top. Actually as the frequency is increased, the capture area and physical size of the antenna should not be decreased in order to intercept as much signal as possible in space. This usually means more antenna elements and sharper directivity patterns. A compromise is chosen in most installations, since in any array all driven elements have to be in phase in either curtain or Yagi designs. The phasing problem is perhaps a little easier to handle with two or four Yagi beams in an array, than with a curtain containing 32 or 64 elements. However, if the phasing lines and element lengths are correct in a large curtain array, usually more gain results than with Yagi arrays.

The Yagi beams become more difficult to design with increasing frequency and require a lot of cut and try procedure. At 220 mc, the Yagi designs are not difficult and would seem to offer some advantages over curtain arrays of equal gain values. About 15 db of gain (over a dipole) in either design is the maximum that can be built for mounting on a TV mast at this frequency. This means a curtain of 32 elements, or 16 elements with extended spacings and lengths, or 4 Yagi beams of 5 to 7 elements each. Short or medium long Yagi beams have wider bandwidth than long Yagis and less than curtain arrays. Yagi antennas have a better front to back ratio which in some noisy locations can be a deciding factor, such as at the location of W6AJF.

The 222 mc beam with 4 Yagis of 6 elements each is illustrated in figs. 2.14 and 15. The parasitic elements are made of ⅛ inch brass tubing held in the aluminum booms by small sheet metal clamps as indicated in fig. 2.15. The folded dipoles are made to have a resistance multiplier of 15 times so as to raise 20 ohms to 300 ohms. These are made with ¼ inch diameter brass tubing through the booms and the driven portion of number 12 hard drawn copper wire with a small polystyrene insulator at the center where the 300 ohm phasing line attaches. The wire is stiff enough to be supported at the soldered outside ends and by the poly insulator at the feeder points. The spacing, center to center, is between ½ and ⅝ inches for the two dipoles. The phasing lines are all made of 300 ohm tubular line with poly foam filler to avoid internal moisture and sealing problems. The two vertical lines are of equal length, center tapped, and no twist between connections. All right hand half dipoles have the same phase of current from the main coaxial feeder and its 50 to 200 ohm balun, by having all right hand halves connect to the same side of the phasing lines. The same holds true for the other sides. The horizontal phasing line is also centertapped and each side is ¾

Fig. 2.14—A 222 mc beam consisting of four 6 element yagis.

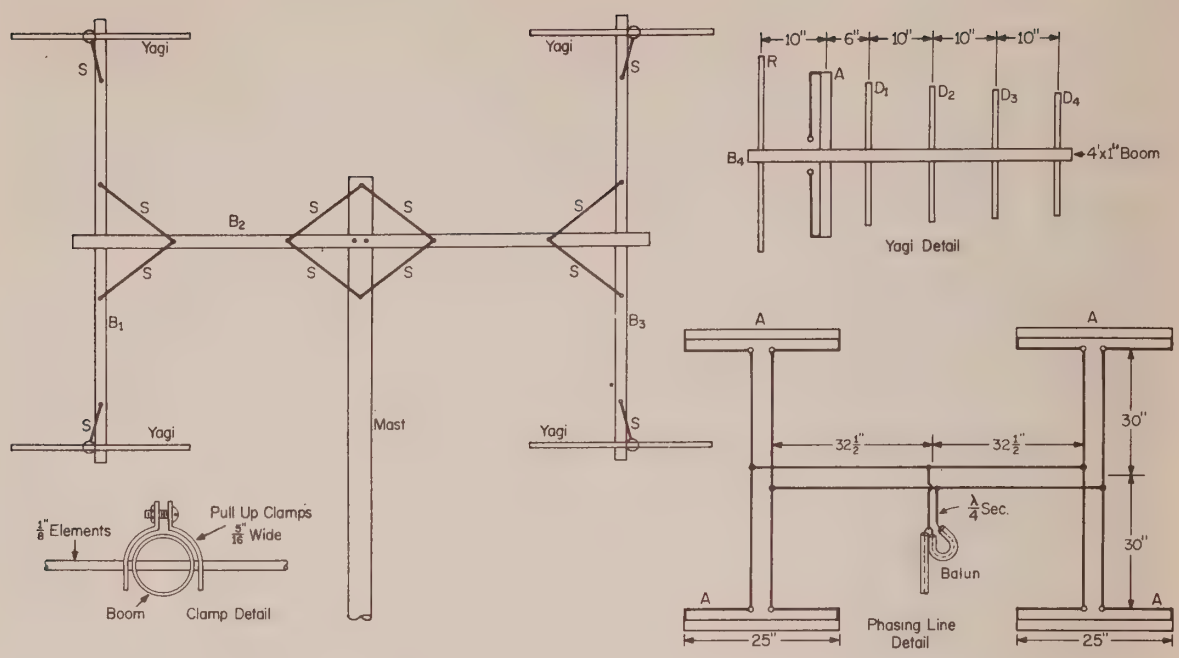

Fig. 2.15—Dimensions and construction details for a 222 mc 4 yagi array shown in fig. 2.14 The anti-sway bars, (s), are made of ¼" diameter aluminum tubing and all the parasitic antenna elements are ⅛". The brass element lengths are:

R—26¾" long, ⅛" dia.
A—Folded dipole, 25" long, ¼" diam. and #12 wire spaced ½".
D_1—23¾" long, ⅛" diam.
D_2—23⅝" long, ⅛" diam.
D_3—23½" long, ⅛" diam.
D_4—23⅜" long, ⅛" diam.

The phasing line is constructed of 300 ohm tubular line and the balun is a 17½" loop of RG11U fed by RG8U. The λ/4, 245 ohm section is 13" long, ½" spaced, ⅛" diameter tubing.

wavelength or 34 inches long. This results in a 300 ohm impedance at the center if each folded dipole is 300 ohms. A 75 ohm coaxial line and 75 to 300 ohm halfwave balun could be tied on here directly but a 200 ohm balun requires a quarter wave matching line of 244 ohms impedance, 13 inches long. This impedance value is from the formula $Z = \sqrt{Z_1 \times Z_2}$ where $Z_1 = 300$ and $Z_2 = 200$ ohms, the end impedances. The quarter wave section can be designed from the expression $Z = \log_{10} \frac{2S}{D}$ when Z and D are known. $D = 1/8$ inch diameter conductors and S is the center to center spacing. This calculates to be very close to ½ inch for $Z = 244$ ohms. This matching section from the folded 200 ohm balun (27 inches of RG11U or RG8U) connects to the center phasing line. It is visible in the illustration fig. 2.14. Poly sheet insulators fastened to TV hardware clamps mount this quarterwave line out several inches from the mast. TV antenna hardware is available and useful in construction of beam antennas. Numerous short pieces of ¼ inch diameter aluminum tubing (from old antennas) were used to make anti-sway braces between all booms.

The 222 mc twin long Yagi antenna shown in figs. 2.16 and 17 was the result of trying to get as much gain as possible with two 12 foot booms. The directors in each Yagi were designed from the data and curves in figs. 2.5

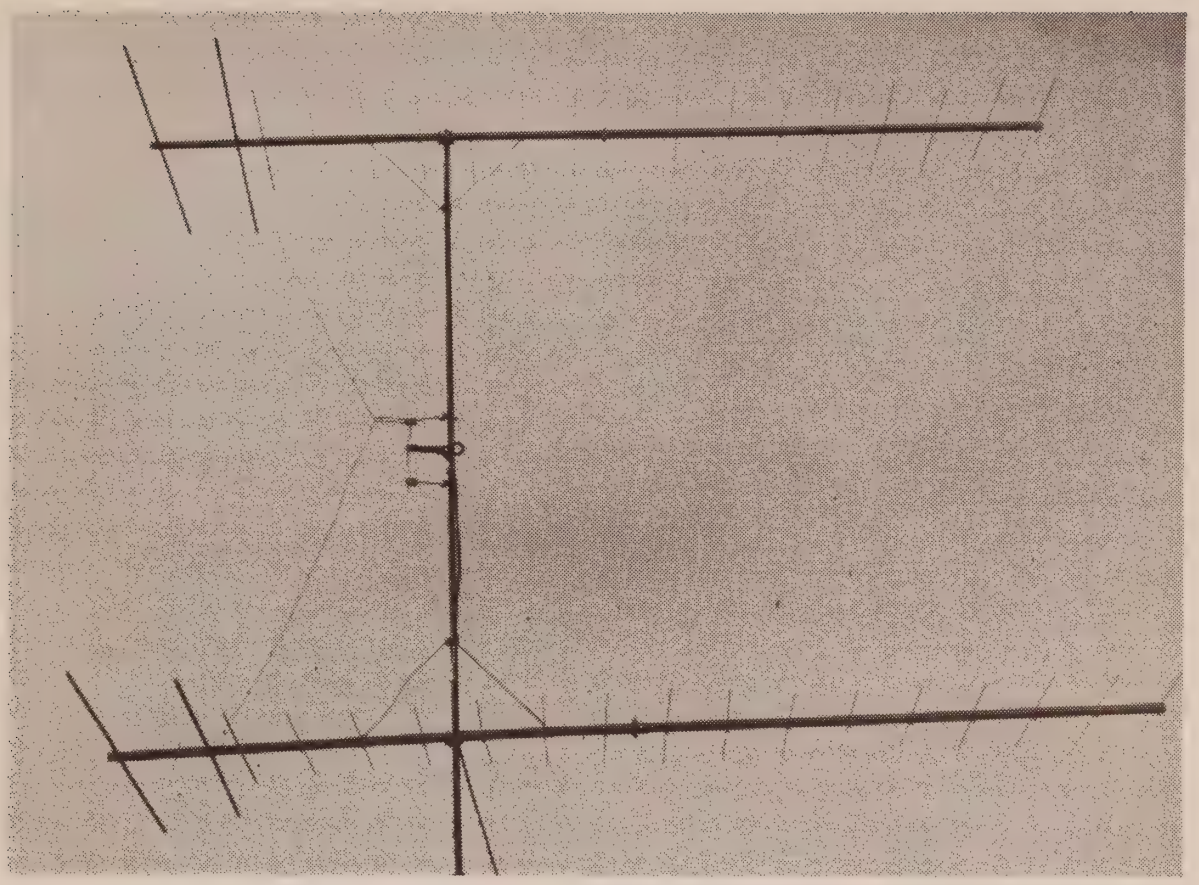

Fig. 2.16—A 222 mc twin long yagi beam.

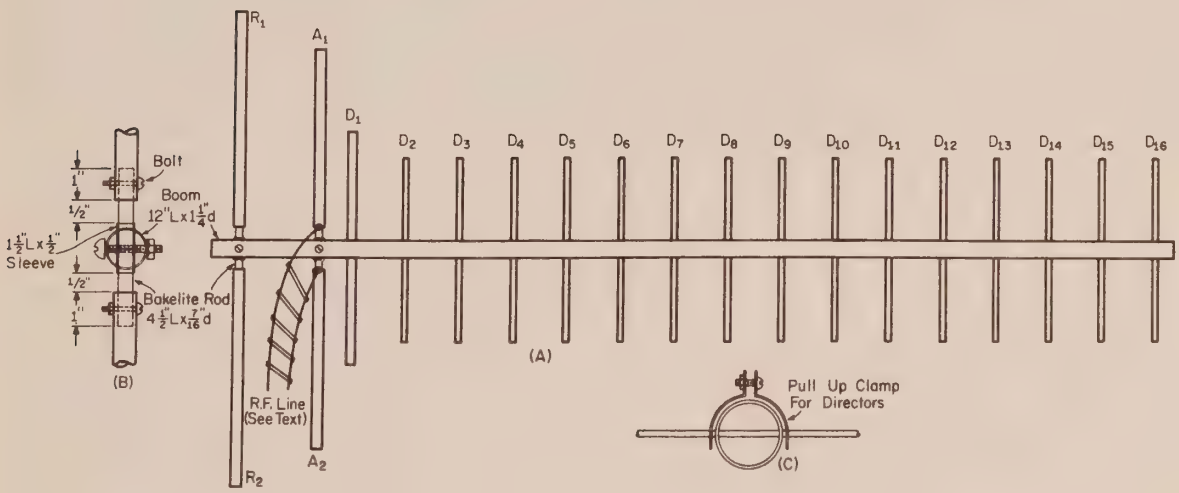

Fig. 2.17—Dimensions and construction details for the 222 mc beam shown in fig. 2.16. The balun and phasing line are described in the text. Element lengths are:

R_1, R_2—24″ long, ½″ diam. spaced 12″ to A_1 and A_2.

A_1, A_2—22″ long, ½″ diam.

D_1—24″ long, ¼″ diam., spaced 4″ to A and 8″ to D_2.

D_2—D_{16}—22″ long, ⅛″ diam., all spaced 8″ apart.

Detail drawings (B) are shown for the mounting of the reflector and driven elements and the clamps are shown in detail (C). The clamp is 5/16″ wide with a ⅛″ hole for D_2 to D_{16} and ½″ wide with a ¼″ hole for D_1.

and 6. The first director near the two dipoles in each beam is longer and of larger diameter for less wind vibration. The two dipoles and two reflectors of each beam are mounted on end insulators in the 1¼ inch diameter by 12 foot boom. This type of "launching" device gives about one db or so more gain to each Yagi than is obtained with a folded dipole and single reflector. The two pairs of two end fed dipoles are tuned by means of an open wire stub at the center of the phasing line. The length of an open stub, or a closed stub, has to be determined experimentally as well as the point of connection of the 17½ inch folded balun for connecting the coaxial line to a balanced two wire system. An s.w.r. meter in the coaxial line and a field strength meter well out in front of the beam are needed for these tests. This antenna has about the same forward gain as the four Yagi array previously described (probably close to 15 db).

The phasing line is a 104″ long 450 ohm line, center fed by a 15″ length of open wire stub made of #12 wire spaced 1¼″. The 17½″ balun is connected approximately 6″ from the open end.

2.7 432 MC Antennas

In order to check long Yagi antenna design at 432 mc, where the physical size is small, the long Yagi and corner reflector illustrated in figs. 2.18 and 19 was built and compared with a standard 16 element curtain array. The two antennas had the same gain. The Yagi is 8 feet long, corresponding to a 24 foot 144 mc Yagi.

Fig. 2.18—A 432 mc yagi and corner reflector.

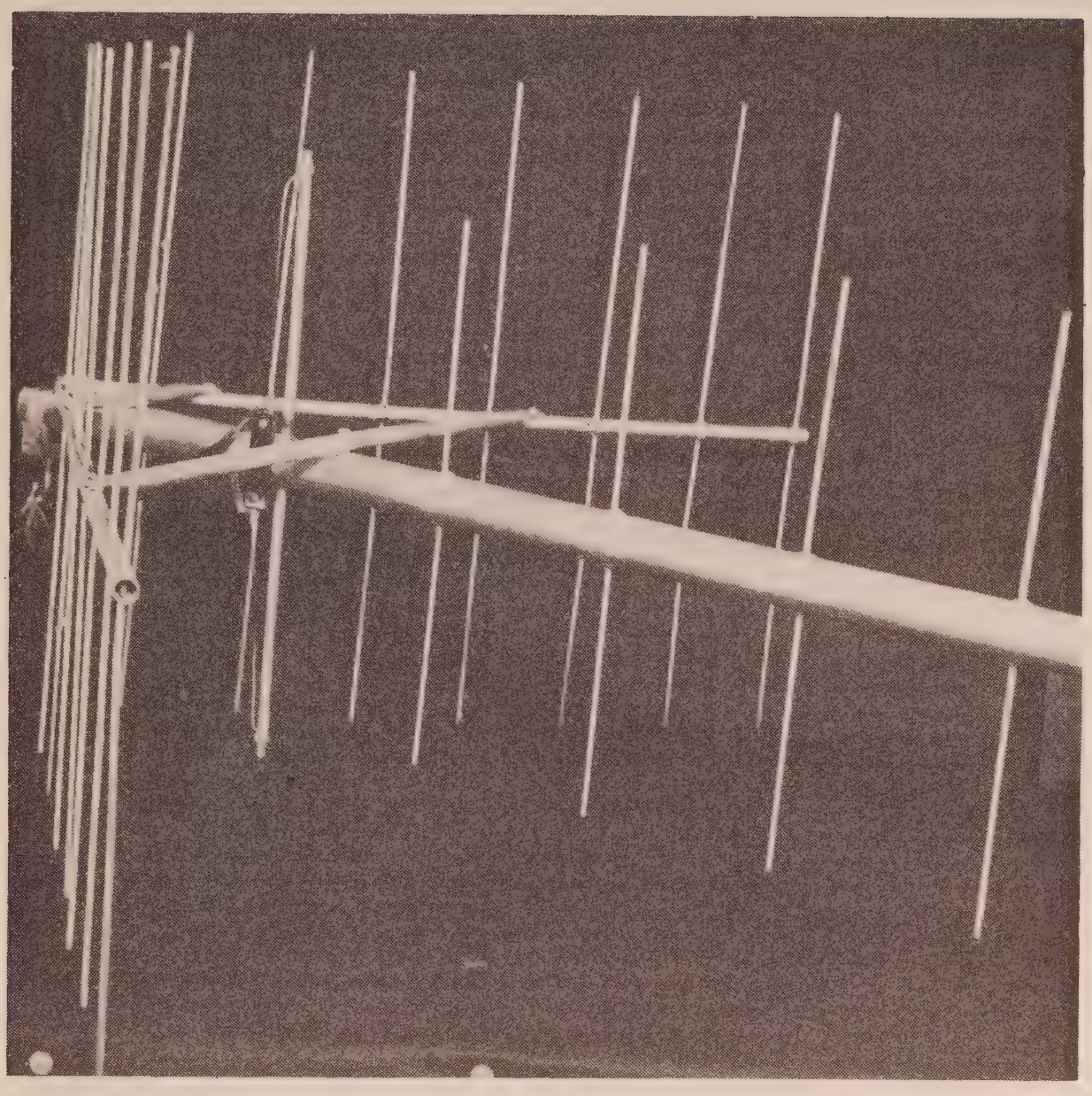

Fig. 2.19—A close up view of the corner reflector and section of the yagi.

A scaled down version of the 144 mc Yagi had about 5 db less gain—probably because not all things were ⅓ scale. The elements were ⅛ inch diameter in both antennas which become "thick" in size at 432 mc. This would require a change in the ⅓ scale length values and a change in ⅓ scale spacing since "thick" directors require closer spacing and become more critical in all their tuning characteristics. By following Dr. Reynolds' design for a long Yagi, the calculated and measured gain figures agreed at about 12 db versus 7 for the "scaled" down model. The design used here requires some type of launcher such as a tuned or untuned corner reflector in order to properly excite the long string of close spaced short directors. As few as three resonant reflectors grouped back near the folded dipole will do fairly well as a launcher. The non-resonant corner reflector in fig. 2.19 is a small 90° corner of conventional design listed in all radio handbooks. Any angle corner with a 2 inch or less spacing of reflectors, each about 16 inches long, will function for this purpose. A "resonant" reflector is approximately 13

inches long at 432 mc. The folded dipole was a little short and had end additions made to the larger dipole in order to hit resonance at 432 mc. It was fed with 300 ohm twin lead. The parasitic elements were all soldered into the aluminum booms with a heavy soldering iron, ordinary solder and "Sal-met" flux. This has had no real weathering tests but apparently is satisfactory and is a faster method of fastening than was used on the 220 and 144 mc beams.

The dimensions for this 432 mc long Yagi were as follows: 8 foot boom 1 inch in diameter with 11 inch by ⅛ inch directors spaced 4 inches apart; corner reflectors 16 inches long spaced 2 inches apart in each 18 × ⅜ corner boom—folded dipole 12½ inches long × ¼ inch diameter with driven element of number 16 wire spaced out about ½ inch clear of the ¼ inch dipole.

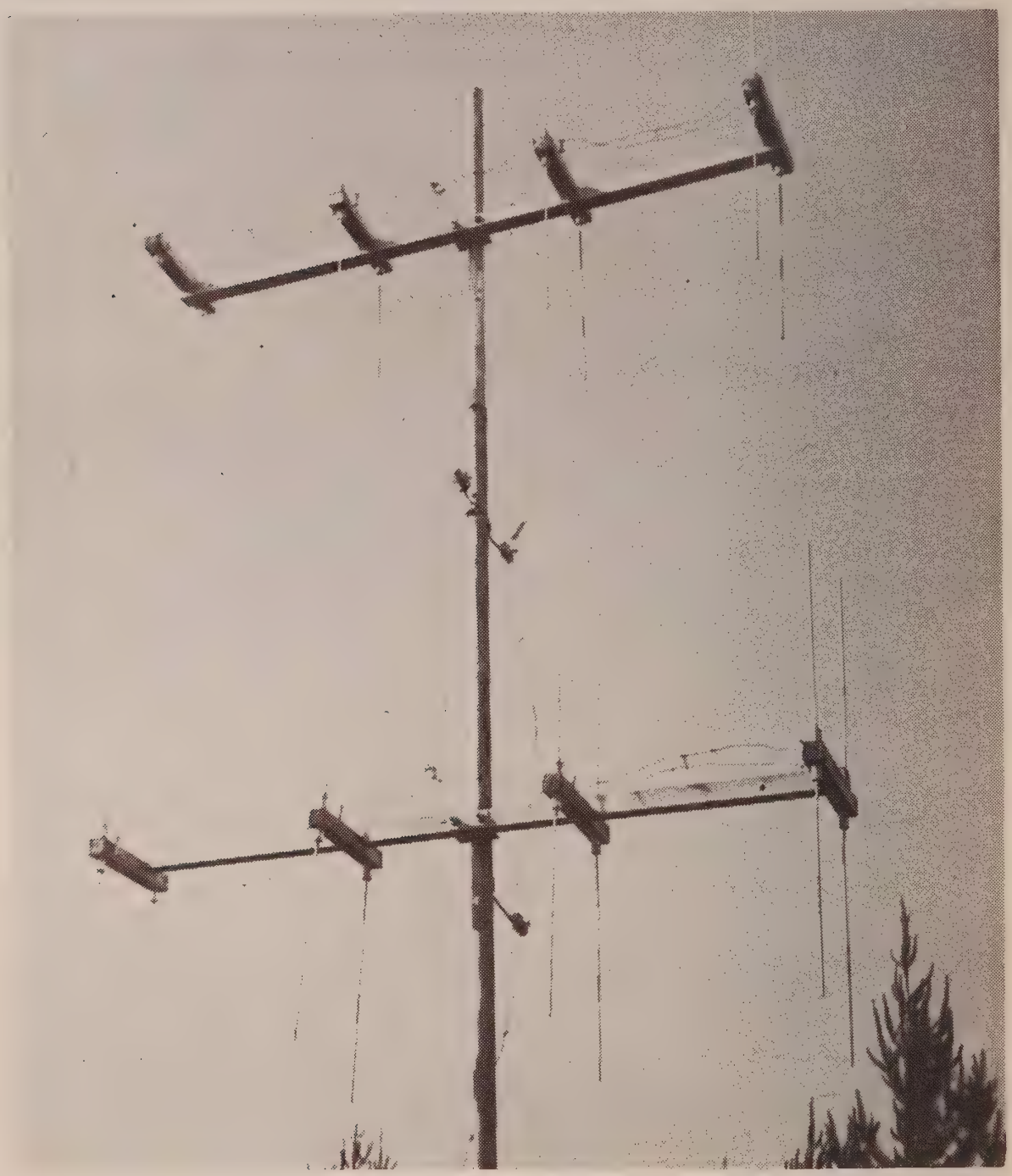

Fig. 2.20—A 32 element 432 mc curtain array after a year of use. Phasing lines were bent by wind storms and bird collisions.

Four or eight of these long Yagis would make a high gain array. The wind resistance would be reduced by using only three or five resonant reflectors in this same corner reflector with wide spacing. Resonant lengths should be about 13 inches or 13¼ inches, and being resonant, the reflector spacing should be at least ¼ wavelength from each other.

The 32 element 432 mc curtain array illustrated in fig. 2.20 was used for about a year. Windstorm and bird collisions pretty well bent up the phasing lines and warpage caused some change of alignment of elements as can be seen in the photograph taken as it was being lowered and retired from service. Halfwave elements spaced a halfwave apart in broadside and reflectors .2 wavelength, five inches behind each dipole were used in two 16 element beams connected together to form a 32 element curtain array. The only unorthodox idea was the use of end mountings for all elements which modified the lengths slightly. The elements were molded into 2 × ½ inch poly rod insulators with a large soldering iron as the element heating device. These insulators were glued into 1 × 1 inch wooden booms which had been varnished heavily. A year of wind, sun and rain ruined the varnish job. Each phasing line to the ⅛ inch diameter elements was made 14 inches long since these lines had to be soldered to the elements up about ⅝ to ¾ inch above the actual end of each element. The first ½ inch of each element was molded into the polyethylene insulators. The end capacity effects made it necessary to shorten the elements to 11¾ inches for each driven element and to 12¾ inches for each reflector. This is ½ inch shorter in each case than if the elements had been mounted in wooden booms at the centers. The halfwave spacing is 13 inches between elements in broadside.

Each 16 element beam measured 12 db gain, so two in a 32 element array should have twice as much power gain or 15 db total. No measurement was made on the combination. The phasing line lengths were such as to provide about 500 ohm impedance at the main feeder line connection (450 ohm, 1 inch spaced line). Nylon cord was used to support the open wire line down between guy wires and around corners but pole rotation had to be limited to 90° to prevent kinking or movement of the line too close to the pole. Tubular twin lead line is better in this respect and in a 50 or 60 foot line, the losses are about the same. Open wire line has less loss when it can be held taut, with no kinks or sharp bends, and is clear of other objects.

The 32 extended elements with extended spacing type of beam shown in figs. 2.21, 22, and 23 will provide nearly twice as much gain as a standard 32 element curtain. The effective capture area is excellent in both horizontal and vertical planes. The gain of nearly 18 db is high and the front to back ratio is good enough for 432 mc where man-made noises seem to be less than on the lower VHF frequency bands. The problem of external noise reduction at this frequency is less important than gain in the desired direction. Extended spacing (¾ instead of ½ wavelength) causes the array to have a sharp front lobe and the beam has to be oriented carefully for weak signal reception. The two major side lobes of response are greater than with halfwave spacing which may be a disadvantage in some locations. This antenna has practically the same forward gain as a standard 64 element curtain, and lends itself to all metal construction very readily. By placing

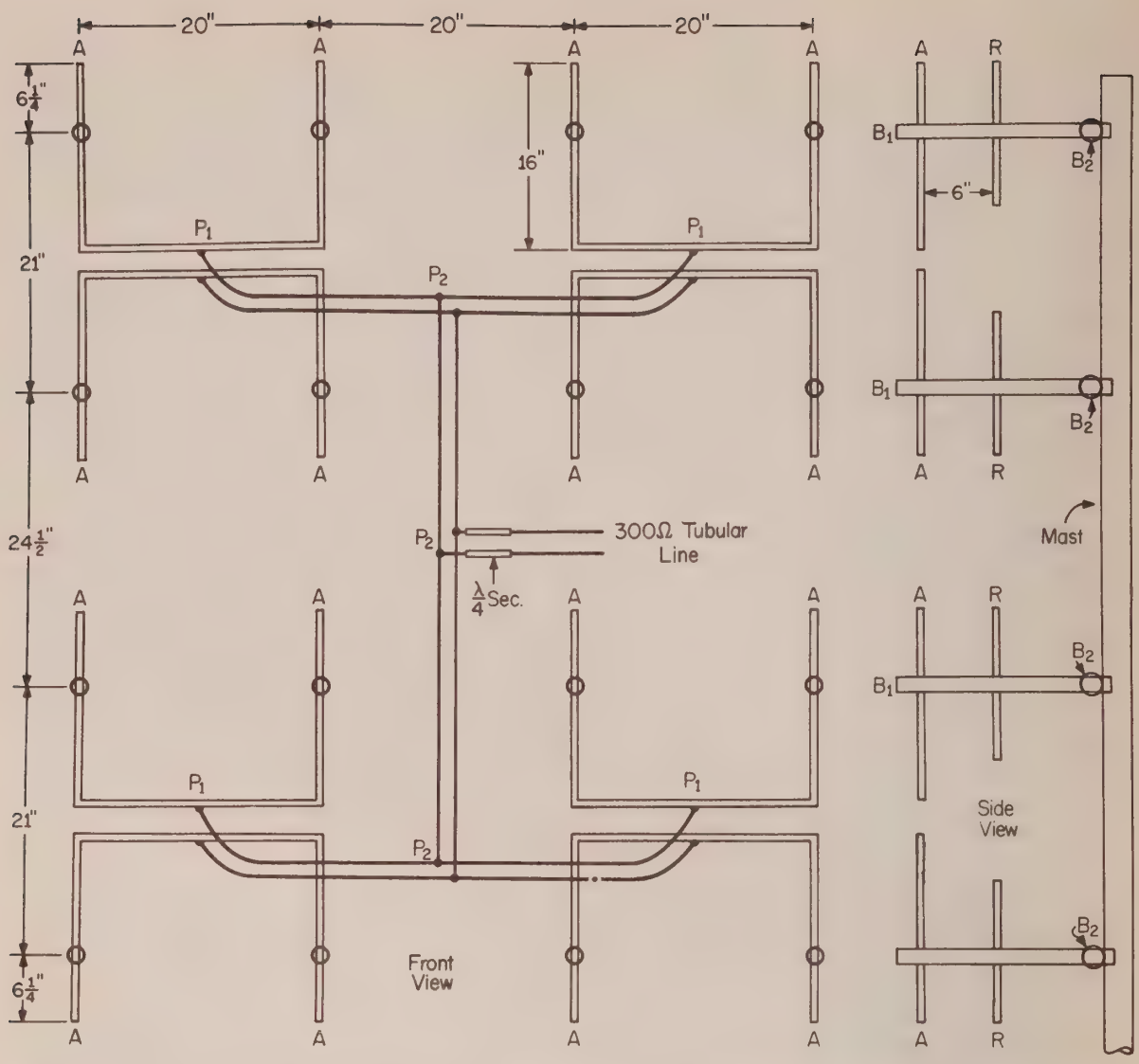

Fig. 2.21—Construction details of a 32 element 432 mc extended array. The elements data is:

R—13¼" long, ⅛" diam., 16 required.
A—16" long, ⅛" diam., 16 required.
P_1—20" long, #16 wire, 1" spaced, 4 required.
P_2—45" long, center tapped, 300 ohm tubular, 3 required.
λ/4 section—6" of ¼" brass tubing with adjustable spacing.
B_1—9" long, ⅜" diam. brass tubing, 16 required.
B_2—5' long, ¾" diam. aluminum, 4 required.

the four large supporting booms in back of the reflector elements, the undesirable structure resonances can be more easily eliminated. The weight unbalance with this method is not bad if light elements and small element supporting booms are adhered to in the construction.

The 16 reflectors elements, center mounted, are each 13¼ inches long and ⅛ inch in diameter. The antenna elements are each 16 inches long, of ⅛ inch diameter, 6 inches in front of its reflector. The small mounting booms of ⅜ inch thin wall brass tubing are 9 inches long which makes it easy to solder the ⅛ inch elements securely in place. Each antenna or driven element is mounted 6¼ inches from the open end to the center in the ⅜ inch boom. The long part of each driven antenna connects to a phasing line which in this case was made of number 14 wire spaced a little over 1 inch with 2 spacers made of poly rod ⅜ inch in diameter. Each 21 inch piece of phasing line wire is melted into the poly rod by heating the wire near the poly rod

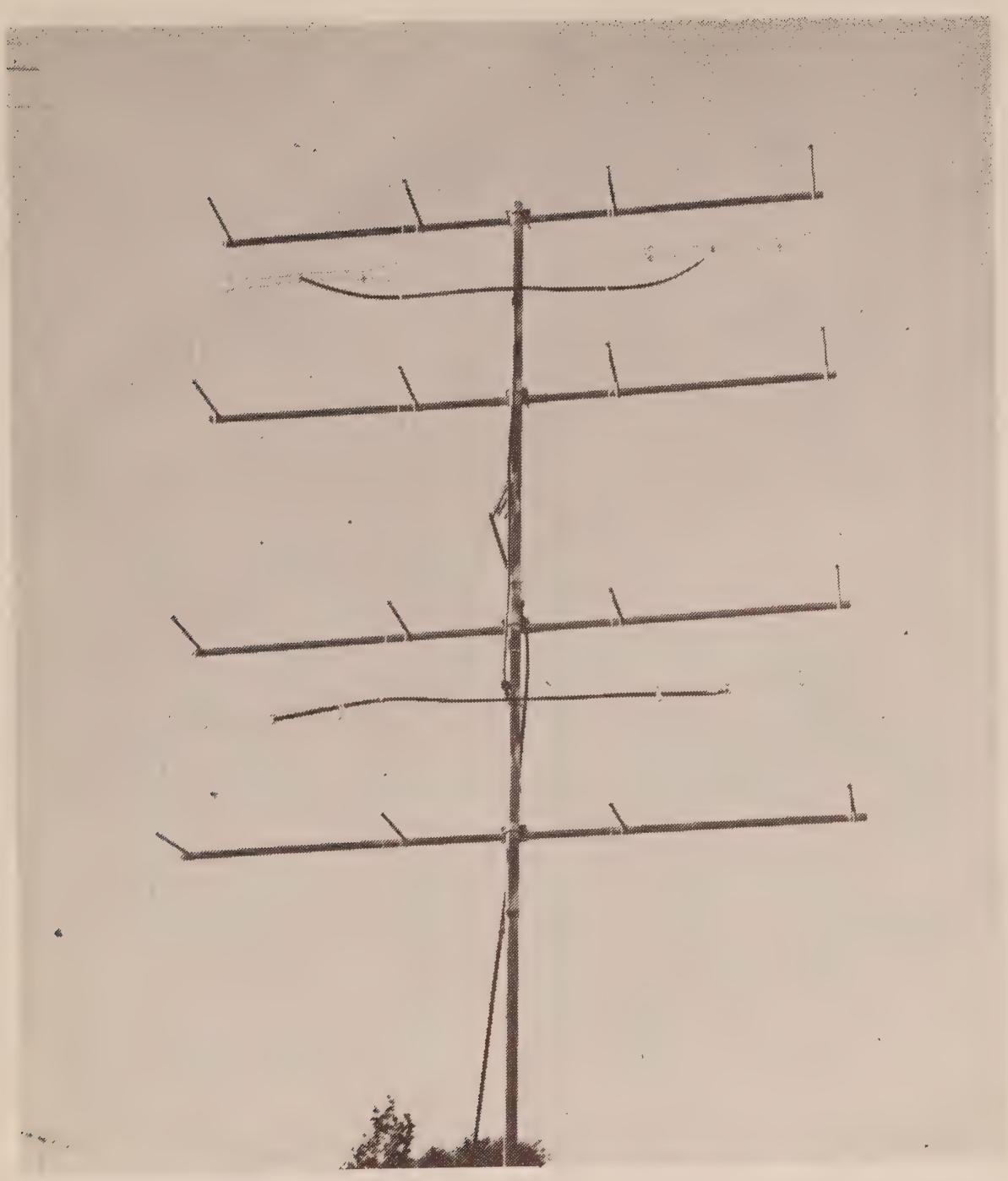

Fig. 2.22—View of the completed 32 element, 432 mc array.

with a large soldering iron until it can be pushed down well into this insulator. The two insulators are not far from voltage nodes so have little effect on the line electrically even in wet weather. One half inch of each end of the phasing lines are cleaned and soldered into the ⅛ inch diameter element tubing, so each phasing line is 20 inches long, the exact spacing between driven elements.

At the center of each open wire phasing line, a piece of 300 ohm, foam filled tubular line is connected as shown in figs. 2.22 and 23. This line, 45 inches long, between each set of 4 driven elements, is electrically 2 waves in length or 1 wave each side of its center. The vertical section of 300 ohm line is also made 45 inches long with the quarterwave matching section

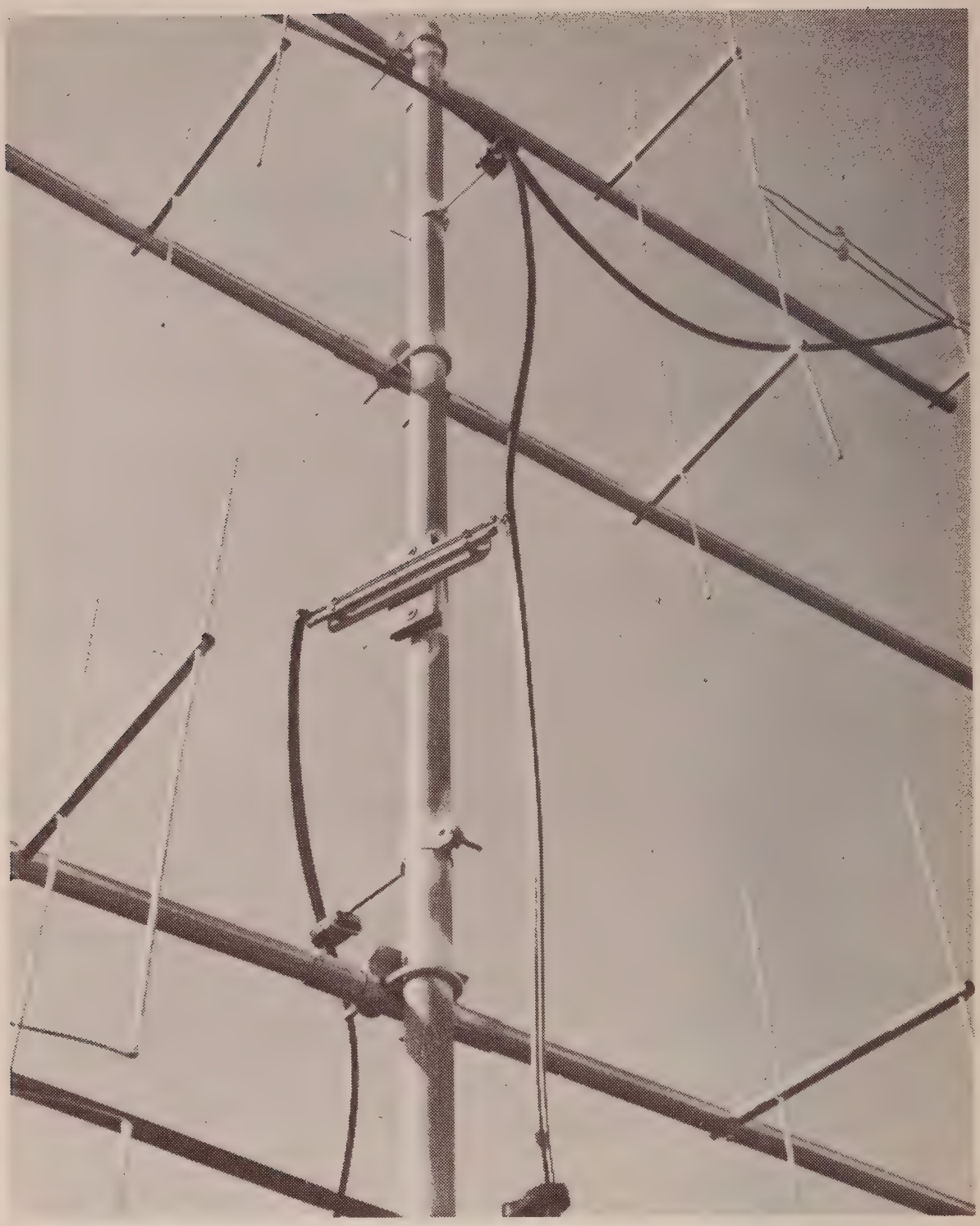

Fig. 2.23—Close up showing the adjustable spacing $\lambda/4$ section and boom clamping details.

connected to its center. Figure 2.23 shows the matching section, two pieces of ¼ inch × 6½ inch brass tubing mounted with small standoffs on a bakelite board. The latter has slots for the standoff screws for adjusting the impedance in order to match the 300 ohm main tubular feeder to the array at its center point. This is all that is necessary if all lengths in the array are correct for resonance, but in actual practice this is hard to realize. The final tune up found the writer wrapping a small piece of copper foil around the vertical feeder a few inches above and below the matching section to tune the

system to resonance. After the proper width of copper foil and its location on the line were found by s.w.r. measurements on the main feeder below the array, these tuning gadgets were covered with electrical tape and everything was given a few coats of clear antenna lacquer spray. At a later date it was decided to try the array without the matching section since it wasn't really designed as a bird roost! The 300 ohm tubular line then connected directly to the vertical phasing 300 ohm line at its center and one wide piece of copper foil took the place of two smaller pieces. In this case the one piece, about 1¾ inches wide, was wrapped around the main feeder a few inches below the array center point, and slid along the tubular feeder to the transmitter for minimum s.w.r. readings. It is a good plan to have a field strength meter out in front of the beam during these experiments or tune up just to be sure that the antenna elements are being resonated, not the whole structure. It is possible in some all-metal arrays to resonate the whole structure with a very fine low s.w.r. value on the feeder but little or no gain or reading on a field strength meter.

Nearly all 432 mc transmitters and receivers are designed with 50 ohm impedance connections for coaxial lines. Coaxial relays designed for use into the microwave region are available at slightly higher prices than the

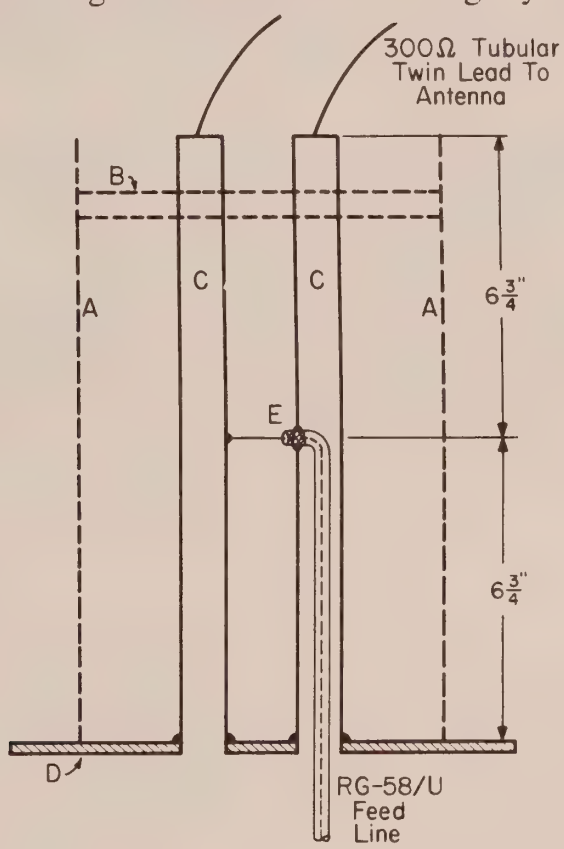

Fig. 2.24—Construction details for a 432 mc balun to match RG58U to 300 ohm twin lead.

A—13½" long, 2" diameter shield (optional).

B—Poly block spacer.

C—13½" long, ¼" diameter thinwall brass tubing spaced 0.35" center to center (.1" clearance between tubes), soldered to base plate D. Top ends of the tubing are closed with metal plugs.

D—Base plate 4" × 4" or larger; 1/16" or ⅛" thick.

E—File hole in tubing and solder braid of RG58U to outside edges of the hole. Solder the inner conductor to the other brass tube.

For RG8U use ½" diameter tubing spaced .7" center to center.

more popular types which are fine in the HF region, and so should be used if possible. The antenna side of the relay should be connected, by coaxial line, to a 50 ohm to 300 ohm balun in the radio room or through the wall, to the 300 ohm tubular line in case this form of transmission line is used to the antenna. A balun for 432 mc is shown in fig. 2.24. No picture was taken of this unit since it was permanently installed in a wall of the radio room at W6AJF. It is really a combination of a balun and a quarter wave matching section to raise the impedance from 50 ohms to 300 ohms. The spacing and diameters of the two brass tubes in this device determine the impedance of the quarterwave section portion. Calculation of this type of quarterwave transformer was outlined earlier in this chapter.

2.8 1296 MC Antennas

This band may not be too useful for communication but it offers a wonderful place for antenna experiments. An antenna element is slightly over 4 inches in length, so all kinds of antenna arrays can be put together with number 14 hard drawn wire and dowel rods without much effort or expense. A folded dipole of this wire, a 1N82A or miniature diode, and UHF small bypass capacitor with a d.c. lead to a microammeter, or even a 0-1 milliammeter, makes an effective field strength meter. A simple s.w.r. device is shown in the test instruments chapter which can be used on open wire or tubular twin-lead transmission lines. The experimenter can easily check the relative amount of r.f. power going into an open wire or twin lead transmission line as compared to that in the line 30 or 40 feet away, near the antenna connections.

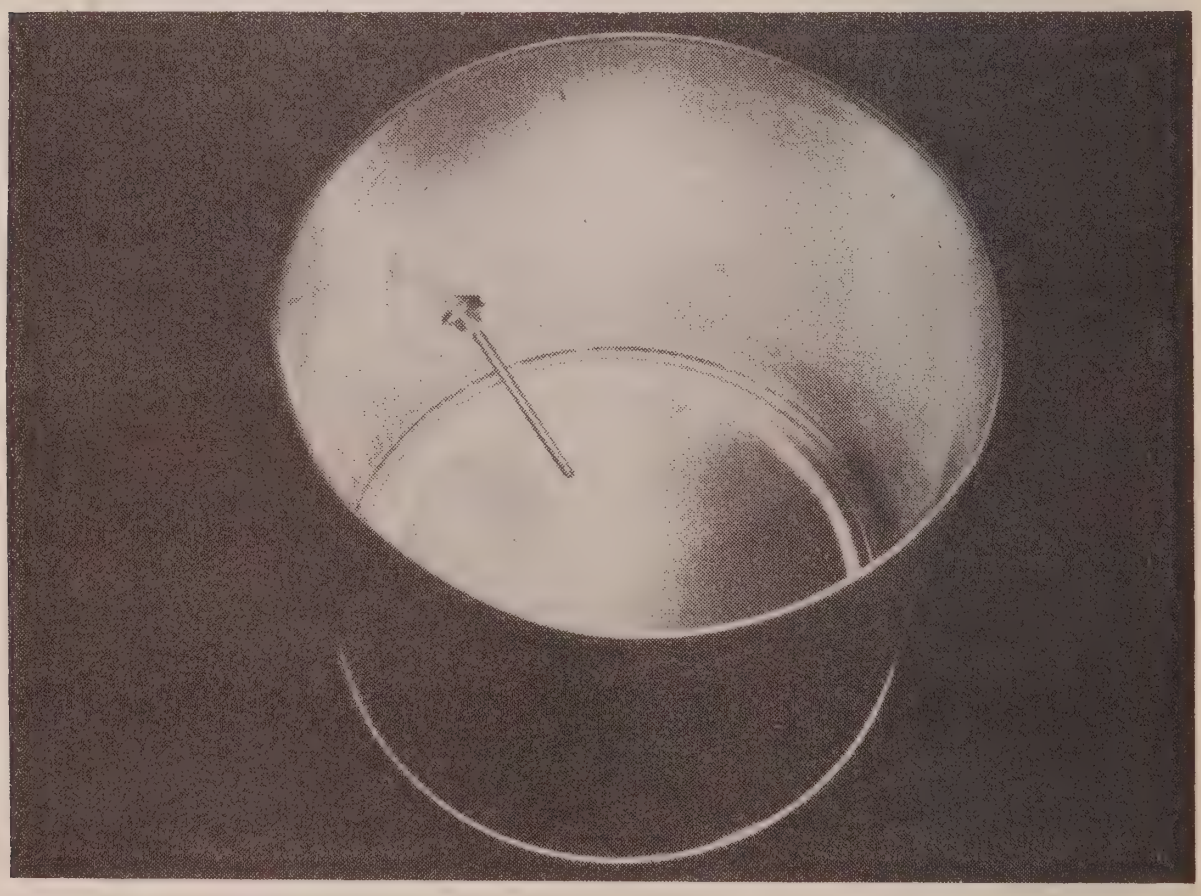

Fig. 2.25—A 1296 mc beam antenna made from a gallon tin can.

A very simple beam antenna is illustrated in fig. 2.25. It consists of a large tin can about 6 inches across, such as an empty "anti-freeze" solution gallon can. A ⅜ inch hole 2 inches from the closed end is needed for a type BNC coaxial fitting. A 2 inch piece of ⅛ inch brass tubing, or even number 14 wire is soldered to the center connection to act as a quarterwave "whip" antenna, about a quarter wave in front of the closed end of this can or circular cylinder horn antenna. The gain is approximately 6 db per gallon.

A large 60° corner reflector for 1296 mc use is illustrated in fig. 2.26. A 3 × 3 foot piece of perforated thin aluminum sheet metal (Reynolds), available in hardware stores, is the reflecting surface. Each side of the reflector is 18 inches high and 36 inches long when used for vertical polarization. The edge braces and cross braces were made of ½ inch diameter aluminum tubing with sheet metal screws for mounting. The unit in fig. 2.27 was sitting on a fence in the picture. In use it was mounted on a TV mast along the rear or apex of the corner. The first winter windstorm made it act like a weathervane and tore the feeder loose. The second 10 m.p.h. wind tore the aluminum structure since the pole had been clamped so it couldn't turn. A cradle-like structure around the reflector at its center of gravity would have been a better mounting device, but certainly less wind resistance would

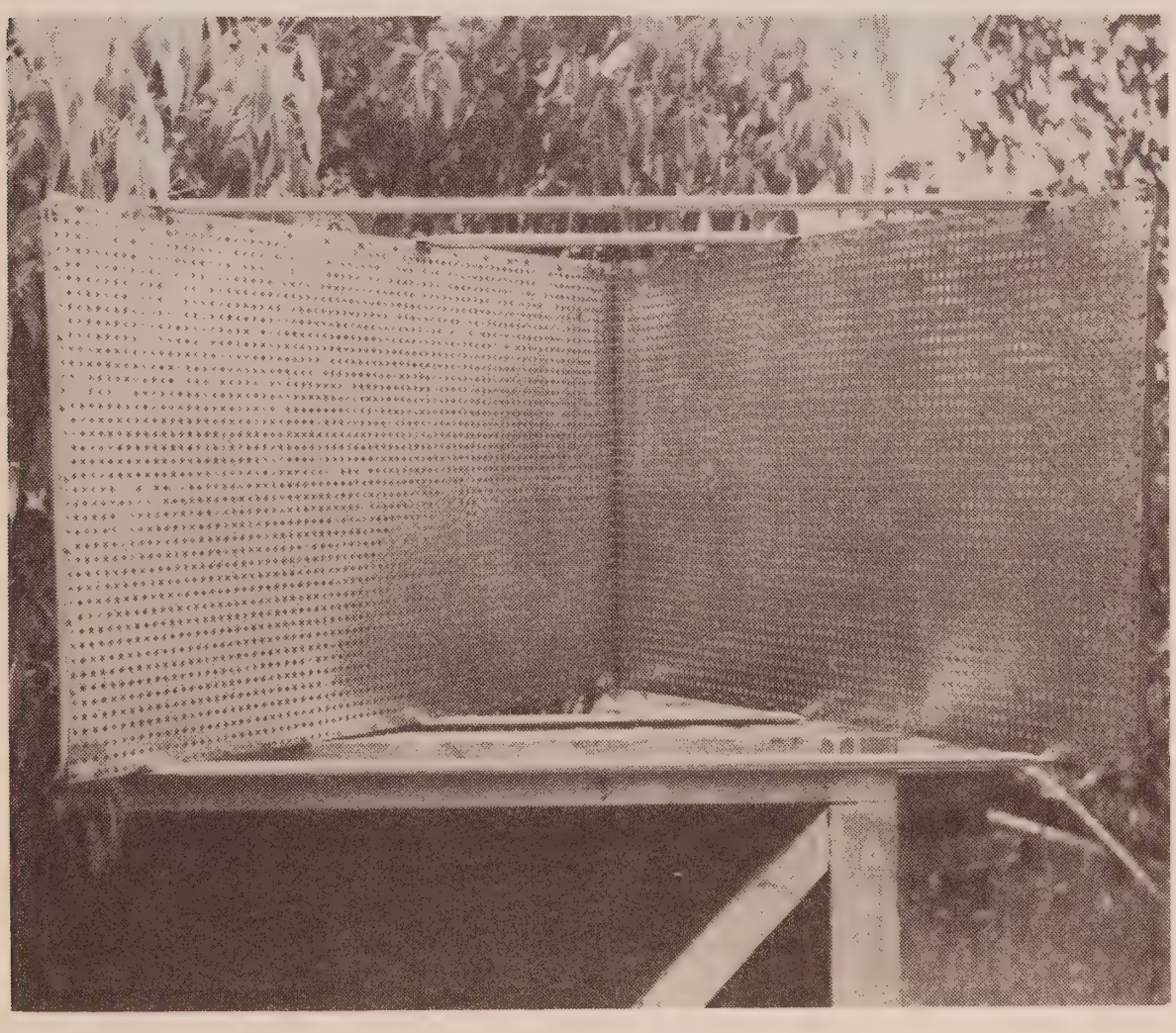

Fig. 2.26—A large 60° corner reflector for 1296 mc made from "Do It Yourself" aluminum.

be indicated for all year service. The sides of this reflector are high enough to permit the use of two or three co-linear dipoles in the reflector. Two antennas used in this way are shown in fig. 2.27. The end poly rod insulators support the antennas on the rear top and bottom corner supports shown in fig. 2.26. The two element antenna consists of a piece of wire 13¼ inches long with the center 4½ inches bent into a hairpin as shown. The wire ends are melted into the poly rods with heat from a large soldering iron applied to the wire near its ends. The center poly insulators are fastened to the hairpin by the same heat treatment.

Antenna impedance matching is accomplished by sliding the 300 ohm tubular feeder along the hairpin section until minimum s.w.r. values are obtained on the transmission line. The latter is brought through on the reflector wall in a piece of sheet poly fastened over the 1 inch hole in the screen. When this antenna was first set up, the usual halfwave spacing (4½ inches) to the apex of the corner reflector was used. It was discovered that about 1 db more gain could be obtained by using 1½ wavelength spacing (13½ inches). The two element antenna adds nearly 2 db over that obtained with a folded dipole and the three element antenna at the rear of fig. 27 is good for 3 db over a single halfwave antenna. This adds up to 15 or 16 db gain for the complete antenna, a value comparable to modest sized parabolic dish antennas. The three co-linear antennas are fed by a 300 ohm feeder connected to the ends of the folded wires—fig. 2.27. This center bend was needed to make a stronger assembly than if the line ran directly into the center and it could be made a quarterwave matching section if desired. The center impedance of three halfwave dipoles vertically mounted at 1½ λ spacing in the reflector is not far from 300 ohms. Each wire in the 3 element antenna is 13⅓ inches long and each of the three dipoles are approximately 4½ inches long. The folded or bent sections are nearly 2⅓ inches long.

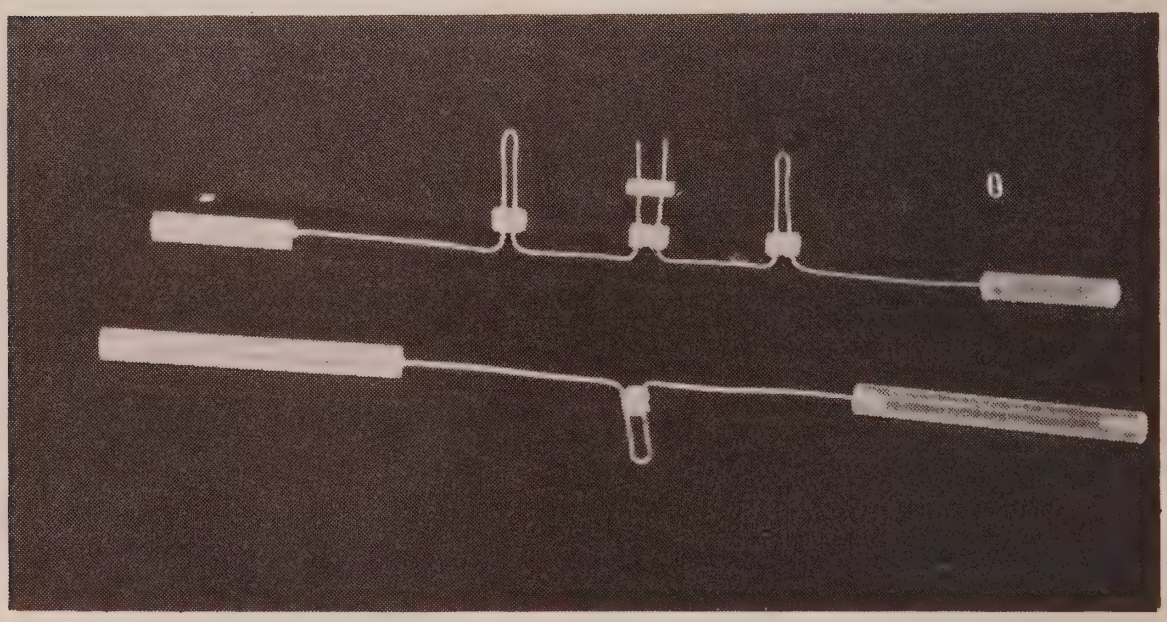

Fig. 2.27—Two antennas used in the corner reflector of fig. 2.26. They are described in the text.

The excellent results obtained with a 432 extended element beam and low wind resistance factor led to the construction of a 32 element (extended elements and spacing) 1296 mc beam illustrated in fig. 2.28. The pictures taken of the beam on the ground show the constructional details. Some copper clad steel antenna wire is used for all elements with the lengths and spacings shown in fig. 2.30. The U shaped extended elements and phasing line section are laid out first so as to fuse the phasing line parts into two poly rod insulators. They are then soldered into ¼ inch diameter brass booms 2 inches in front of the center mounted reflector elements. These little 4 inch by ¼ inch diameter booms are then mounted in the four ½ inch diameter

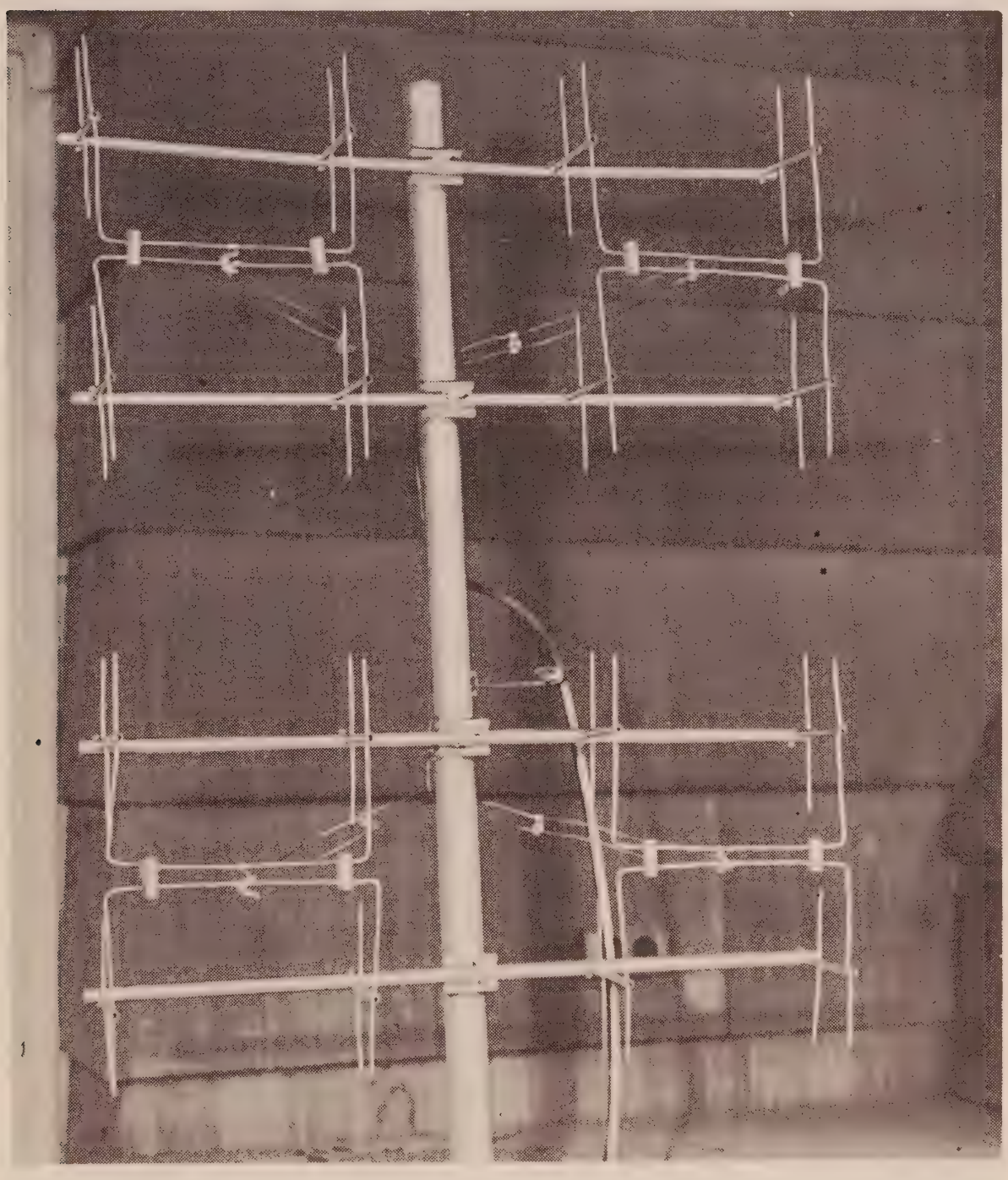

Fig. 2.28—A view of a 32 element extended beam for 1296 mc.

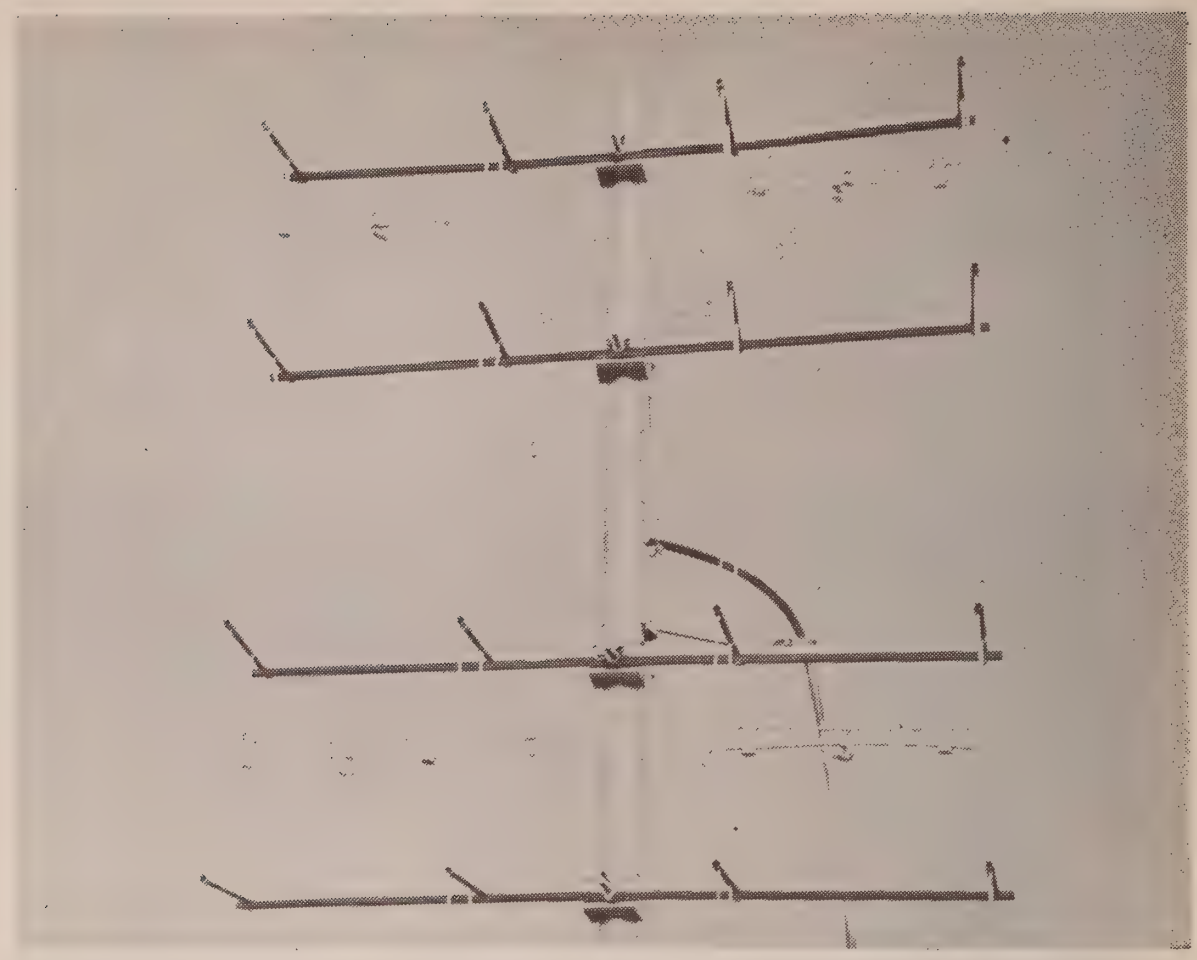

Fig. 2.29—Two close up views of the 1296 mc beam.

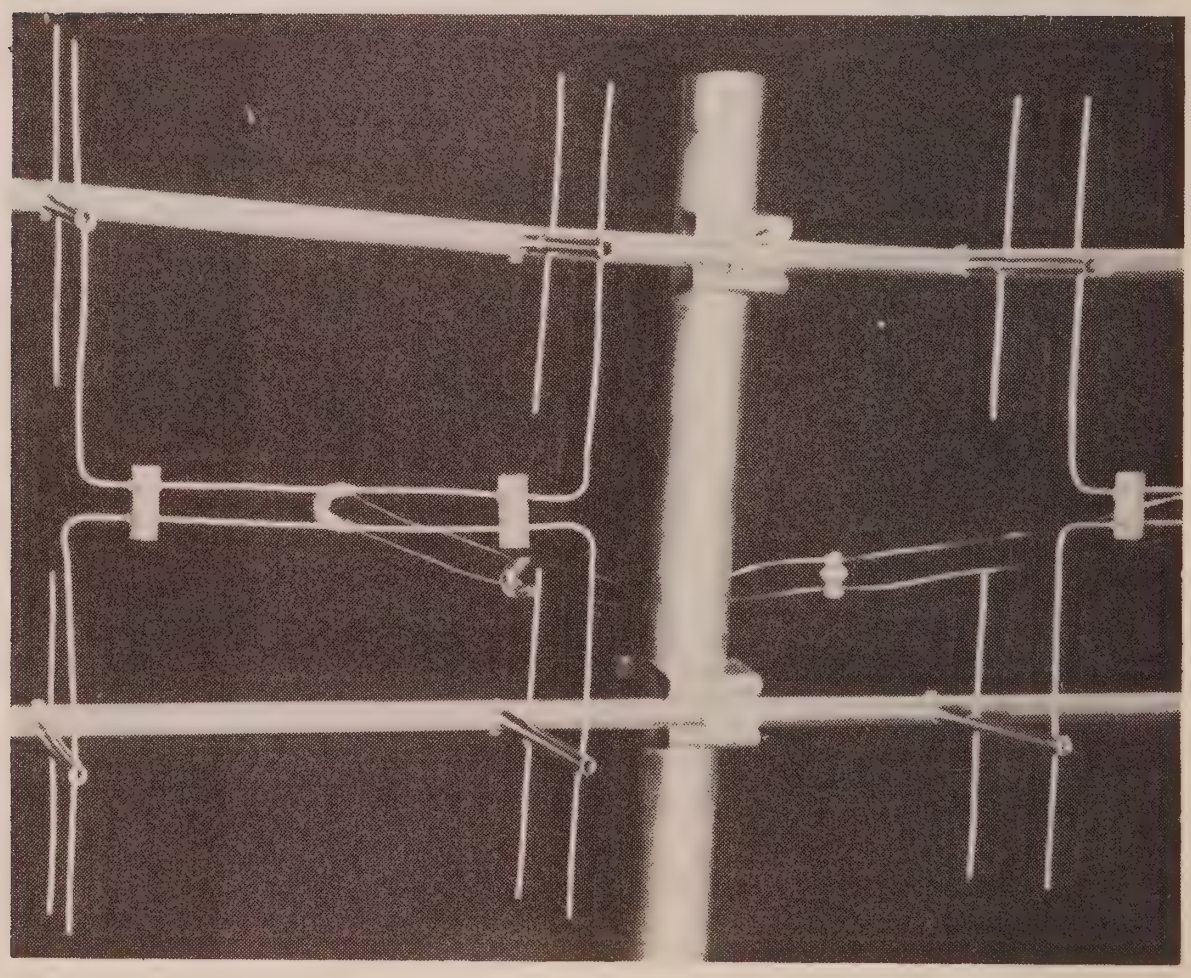

aluminum or brass booms, each about 2 feet long. TV antenna mounts then fasten each of these four ½ inch booms to the 1 inch diameter mast extension as shown in all three photographs. Half inch open wire line is used for the other phasing lines, fig. 2.30, and a piece of large tubular 300 ohm line is tied into the center for a 40 foot run to the radio room. The foam filled smaller tubular line has better internal moisture characteristics but has a little more loss, so either type may be used. Rough measurements indicated that the tubular line had about 1 db less than ½ inch small open wire line (with its uneven spacing) and about 10 db less loss than RG11U coaxial

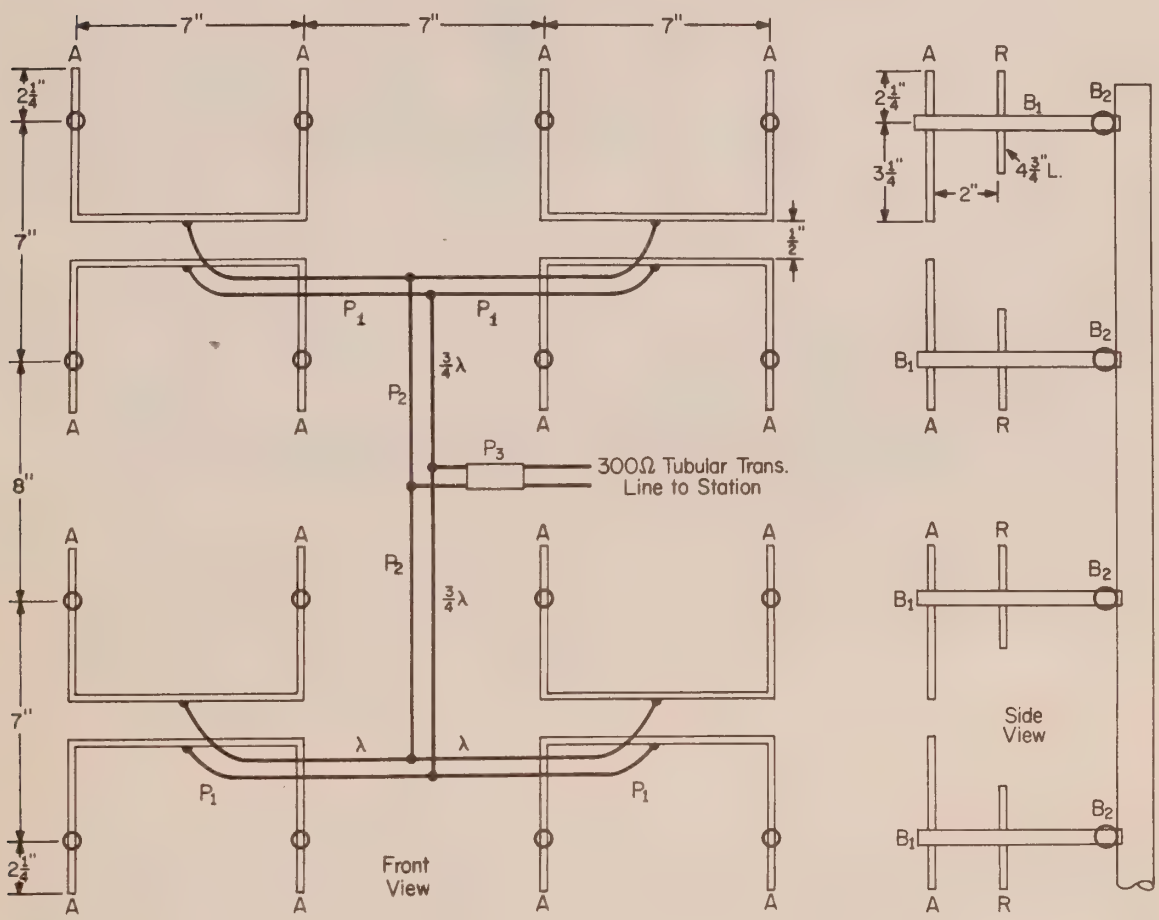

Fig. 2.30—Construction details for the 1296 mc 32 element extended beam of fig. 2.28. All elements are made from #12 hard drawn wire and soldered into brass booms.

P_1—9″ lengths of ½″ spaced open line, 4 required.
P_2—7″ lengths of ½″ spaced open line, 2 required.
P_3—300 ohm tubular line with a copper foil wrap as described in the text.
B_1—4″ long × ¼″ brass tubing.
B_2—2′ long × ½″ aluminum.

line for this 40 foot line. A balun, fig. 2.31, was used in all cases, either at the antenna, or down at the equipment end since the latter was made with coaxial line fittings.

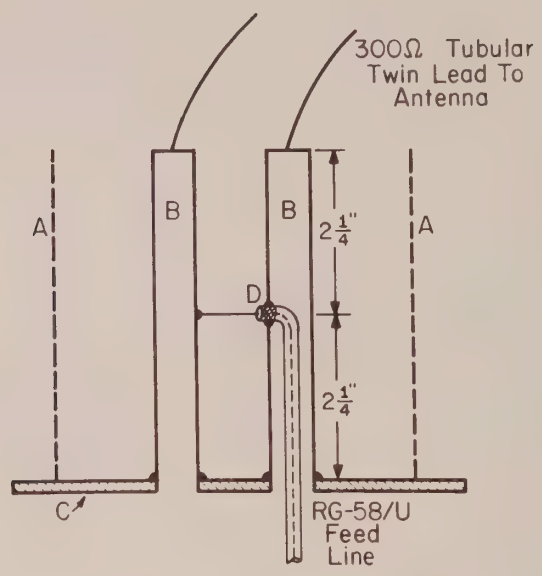

Fig. 2.31—A 1296 mc balun similar in design to that made for 432 mc.
A—4½″ long, 2″ diameter shield (optional).
B—4½″ long, ¼″ diameter thinwall brass tubing.
C—Brass plate 2″ × 2″ or larger, 1/16″ to ⅛″ thick (may be grounded).
D—File hole in tubing and solder braid of coax to outside edges of hole. Solder inner conductor to other brass tube.
The center to center spacing for 50 ohm coax is .35″ and .44″ for 75 ohm coax. The clearance between tubes is .1″ for 50 ohm coax and .19″ for 75 ohms.

3

Transmitters

THIS chapter illustrates types of circuits and constructional ideas which have been used in the different amateur bands from 50 mc up through 1296 mc. Some of the transmitters, particularly the low power types, have been put together without regard to their photogenic properties, in order to try some new idea or to furnish r.f. power at a particular frequency. The layout of parts in any transmitter is subject to the designer's own ideas and particular parts used in the construction. Ideas can be gleaned from photographs, but basically the circuit diagrams are of main importance in the construction of any exciter or complete r.f. transmitter.

Power supplies are usually pretty well standardized and fully described in various general purpose handbooks. A few are shown in Chapter 5. These supplies are nearly always in units separated from the r.f. chassis with cable connections, so are not shown in this chapter unless built into the r.f. chassis. The same applies to modulators, which in general are covered in Chapter 4.

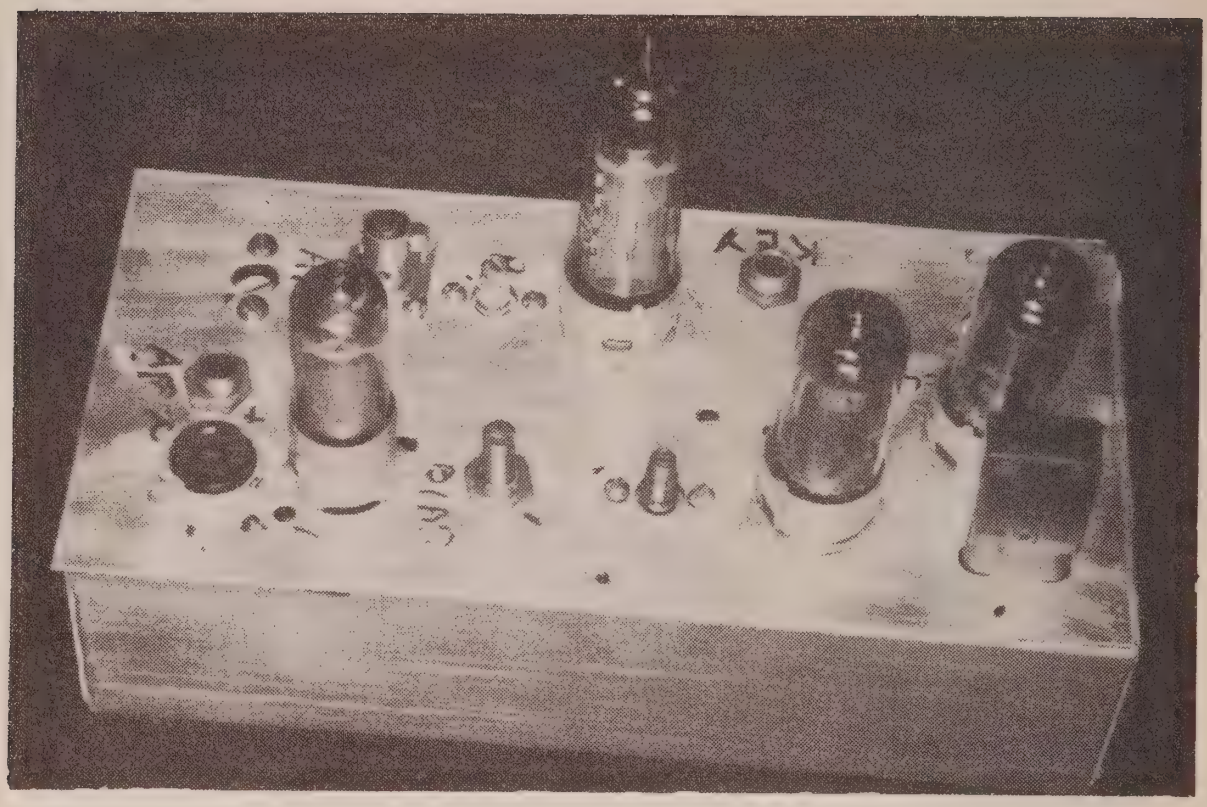

Fig. 3.1—Top view of a low powered 50 mc transmitter. The output is 10 watts c.w. or 5 watts with screen grid modulation. Located behind the crystal, at the right, is the 6CL6 oscillator. To the left of the crystal is the 5763 doubler and to the left of it is the 6360 output. In the center rear is the 6AQ5; the a.f. input jack is to the left of the 6360; the r.f. output is behind the 6360; the bias control for the modulator is to the right of the 6360 and the power supply input plug is in the lower left corner of the chassis.

3.1A 50 MC Transmitters

The small transmitter, shown in figs. 3.1, 2, and 3, has an output of about 10 watts c.w., and 5 watts with screen grid modulation. The output depends upon the plate voltage supply which can be any value from 225 to 300 volts at 150 ma. A 6360 dual tetrode, parallel connected, serves as a 50 mc amplifier for Class C operation on c.w. or phone. A 5763 doubler drives this tube and it in turn is driven by a 6CL6 crystal oscillator-tripler; 8.4 ± mc crystals are used. The r.f. and modulator are all mounted on a 4 × 8 inch piece of sheet aluminum for use in a 4 × 8 × 2 inch aluminum chassis. The screen grid modulator, a 6AQ5 tube, is a power cathode follower circuit which must be driven by a separate speech amplifier having a peak output of about 100 volts. A potentiometer in the 6AQ5 grid circuit (fig. 3.2 is used as a

Coil Data and Parts List for fig. 3.2

L_1—22t, 1⅜" long, ½" diam. 16 tpi Airdux.
L_2—9t, 9/16" long, ½" diam. 16 tpi Airdux.
L_3—7t #12E, ¾" long, ½" diam.
RFC_1—1 mh.
$RFC_{2,3}$—Ohmite Z-50.
RFC_4—6 turns hookup wire 1/16" dia.

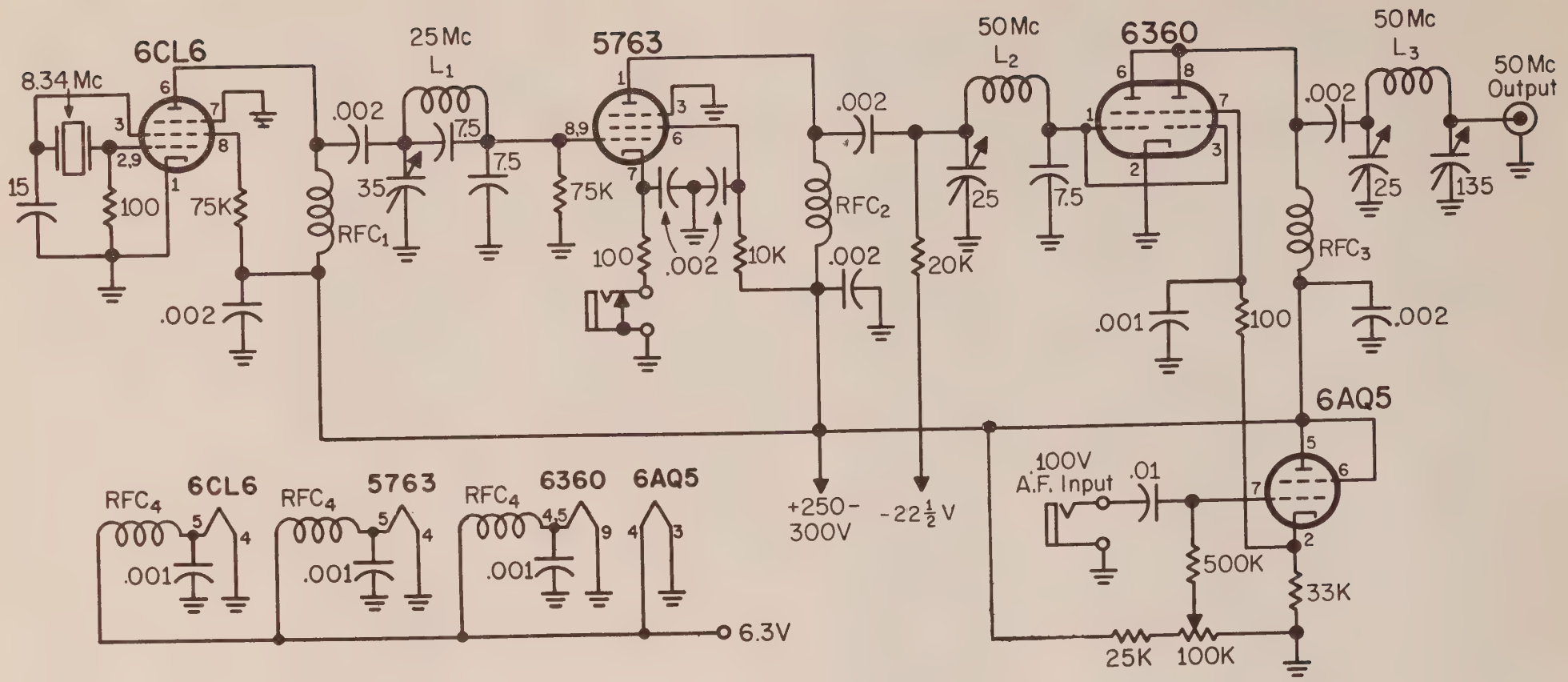

Fig. 3.2—Circuit of the low powered 50 mc transmitter. The output power (approximately 10 watts c.w.) is determined by the input which may be from 225 to 300 volts. A separate speech amplifier is required. (See Parts List on page 48

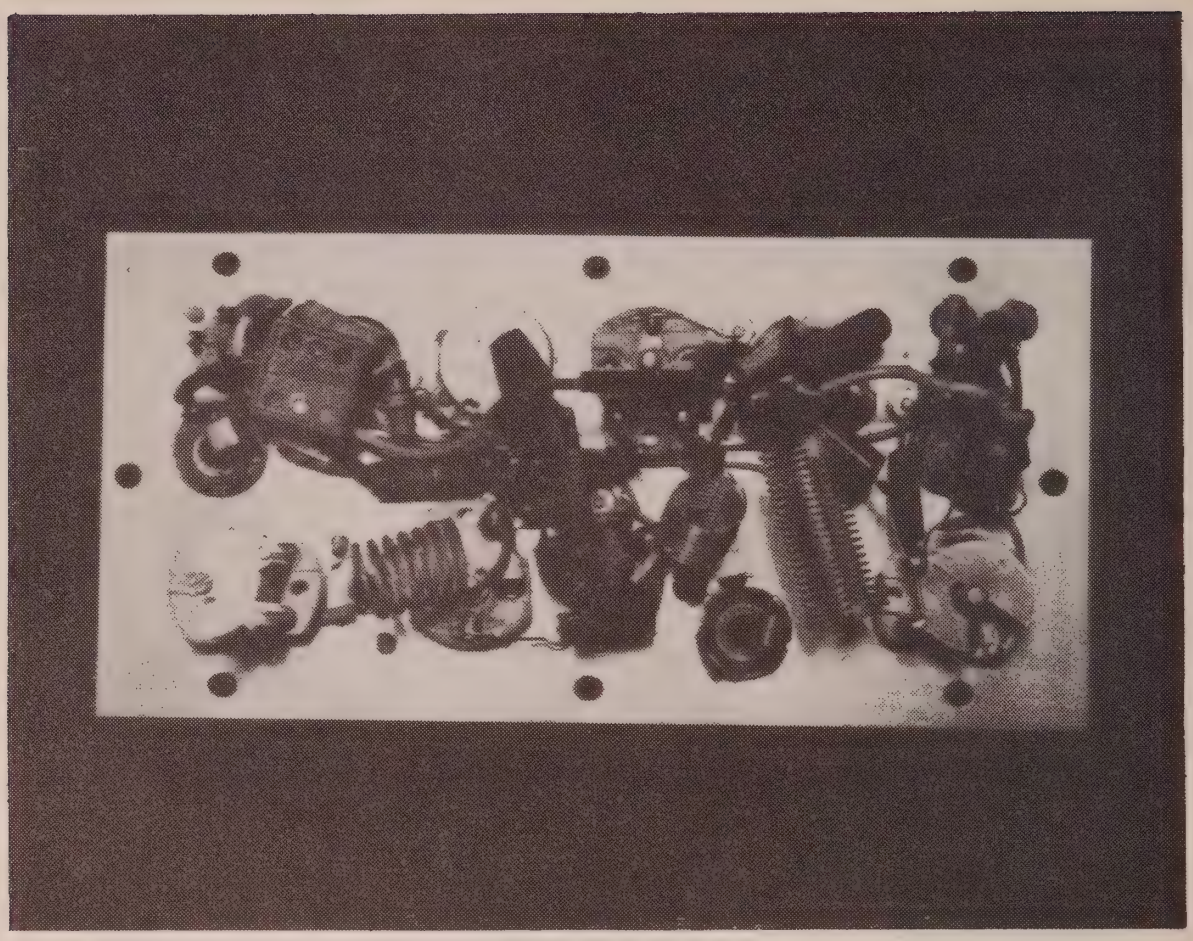

Fig. 3.3—Bottom view of the 50 mc transmitter. Crystal socket is located in the upper right hand corner.

carrier power control for change over from phone to c.w. The voltage drop across the 6AQ5 determines the d.c. voltage on the 6360 r.f. amplifier. This should be from 75 to 100 volts for phone and up to 200 volts for c.w.

All tuned circuits are pi networks. This network, with two variable capacitors in the output plate, permits tuning the plate circuit to resonance with different degrees of antenna coupling. Large values of output capacitance (at resonance) mean less loading on the 6360 tube. The same type of pi network is used between stages with only one variable capacitor as a means of tuning to resonance. This form of interstage coupling is better for high frequency harmonic suppression than with a single tuned plate circuit capacity coupled to the next grid. The two interstage coils were cut from a single 2 inch long coil form ½ inch in diameter with 16 turns per inch in the winding.

If the transmitter is to be keyed for c.w. operation, a 22½ volt battery should be connected in series with the final grid leak in order to protect the 6360 tube when no r.f. excitation is present. With only phone operation, the grid leak without added bias may be used, preferably with 25K or 30K resistor in place of the 20K value shown in fig. 3.2. On phone operation, the final plate current range is from 35 to 50 ma. The plate current for c.w. will be from 75 to 100 ma. The 6CL6 plate current is usually less than 15 ma and the 5763 cathode current less than 50 ma. The final grid current range is 2 to 3 ma.

3.1B 6Y6 Transmitter

Another 50 mc phone transmitter is shown in figs. 3.4, 5 and 6. The complete transmitter with power supply and modulator was built on a 2 × 11 × 7 inch chassis. The carrier output measured between 8 and 10 watts with screen grid modulation by means of a 6W6GT cathode follower tube. The final amplifier, a pair of 6Y6GB tubes in parallel, is a power doubler of the push-pull grid to parallel plate circuit type. This eliminates the problem of neutralization but does require an external low pass antenna filter to prevent higher harmonics from causing TVI. This filter can be of the form shown in the succeeding transmitter in the circuit diagram of fig. 3.10. The power doubler with low mu type tetrodes will screen grid modulate with good voice quality and have relatively high output at moderate or low plate voltage.

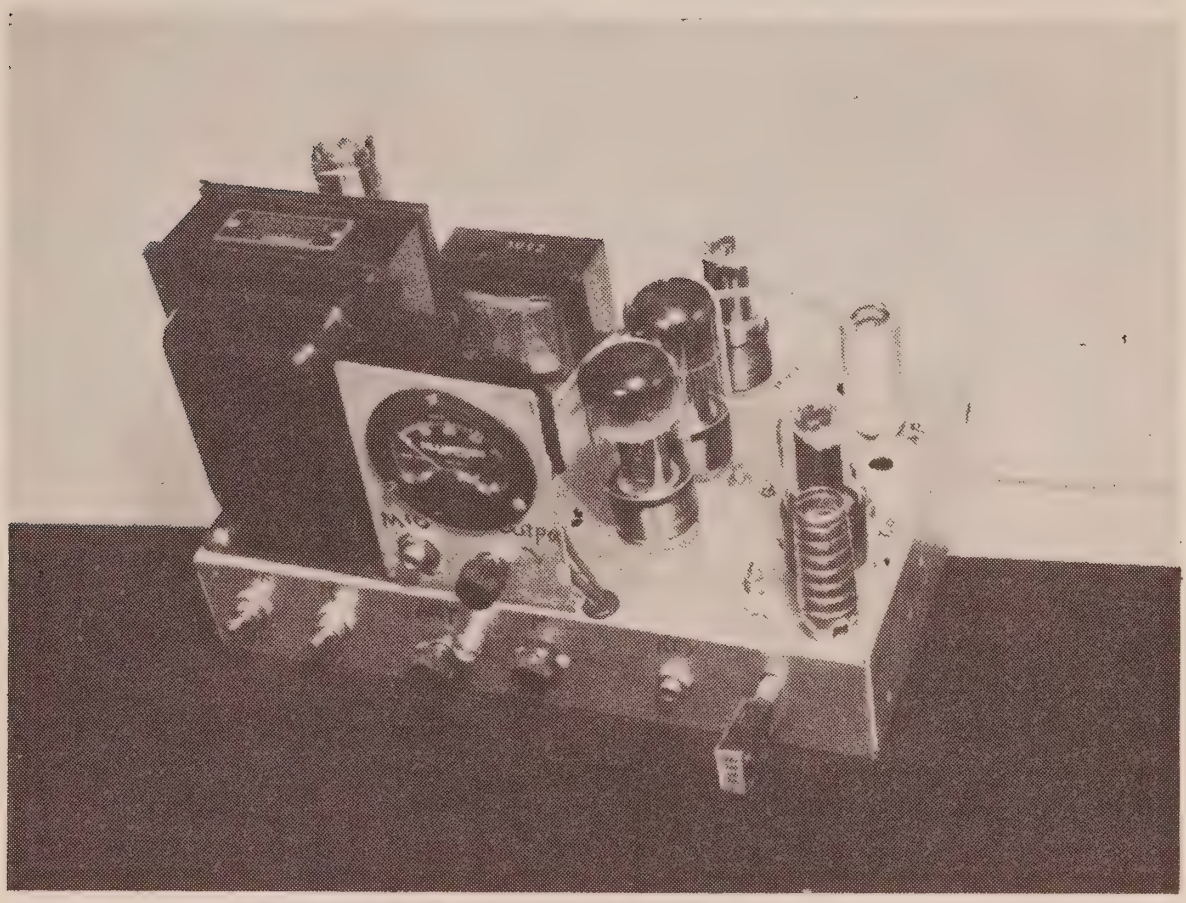

Fig. 3.4—Top front view of an 8 to 10 watt screen modulated transmitter. The power supply is located on the left with the rectifier and filter choke in the rear. The 6AU6 oscillator is in the front right corner with the crystal mounted on the front chassis flange below it. Behind the oscillator is the 6W6. Directly behind the 6W6 is the 12AU7 speech amplifier that drives the 6W6 modulator located behind the 6Y6's. The controls are, from left to right ON-OFF, STANDBY, ANTENNA TUNING, PLATE TUNING. The mic. input and output controls are mounted on the meter plate. The r.f. output jack is just below the output control and the key jack is to the left of the crystal.

A 6AU6 crystal oscillator with plate circuit tuned to 8.5 mc drives a 6W6GT tripler to 25 mc. This is link coupled to the push-pull grid circuit of the final stage which is driven to at least 1 ma of grid current. The final stage plate current ranges from 80 to 100 ma depending upon d.c. screen voltage and the amount of antenna loading. Screen grid modulated stages require heavy antenna loading, beyond the point of maximum antenna feeder current. The d.c. screen voltage can be varied by means of a grid bias potentiometer in the 6W6GT modulator circuit (fig. 3.6). The use of a small interstage a.f. transformer, connected as shown in fig. 3.6, drops the required audio peak voltage from over 100 volts to less than 10 volts. With this connection the 6W6GT is not a true cathode follower for a.f. but is for d.c., as a carrier control. It functions quite well as a modulator which can be driven by a 12AU7 dual triode voltage amplifier and carbon microphone.

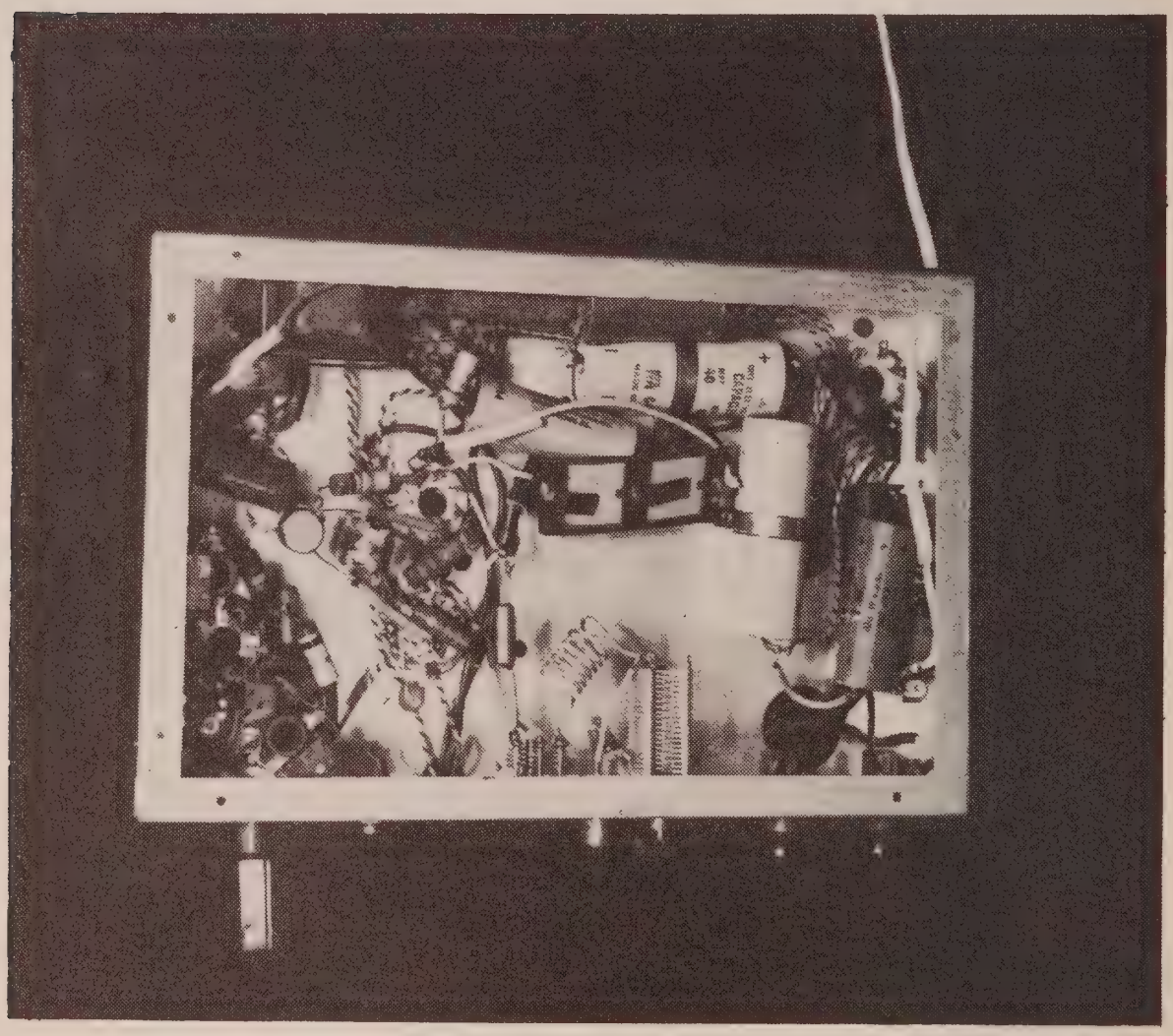

Fig. 3.5—Bottom view. The pi output network can be seen in the center front. Transformer T_1 can be seen in the upper left corner. The two selenium plates in the center are the bias voltage rectifiers and may be replaced with two 1N34's.

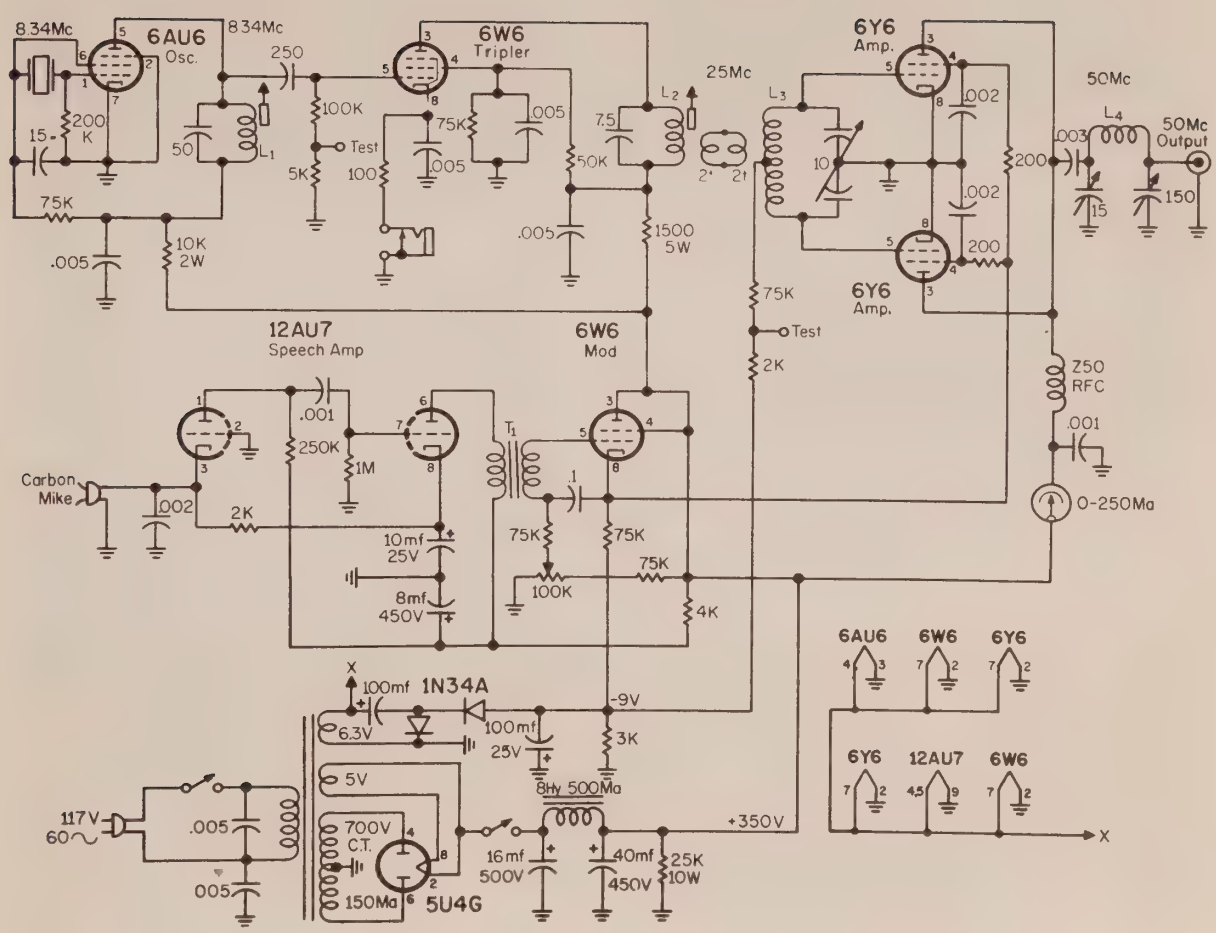

Fig. 3.6—Circuit of a 50 mc transmitter employing 2 6Y6's in the output. The power supply and modulator are self contained.

L_1—20t #24E, ½" long, ½" dia., iron slug.
L_2—14t #22E, ½" long, ½" dia. iron slug.
L_3—20t #22E, ¾" long, ½" dia., center tapped, iron slug.
L_4—7t #12E, ¾" long, ½" dia.
T_1—1:3 step up interstage a.f. transformer.

The power supply, figs. 3.4, 5 and 6, consists of a 700 volt center tapped, 150 ma power transformer for plate voltage, and a negative 9 volt C bias supply from the 6.3 volt heater winding. If the plate voltage supply is lower than the 350 volts shown, it is possible to use 6W6GT tubes in place of the 6Y6GB doublers. With 275 volts supply, a pair of 6W6GT tubes in this circuit will furnish about 5 watts output.

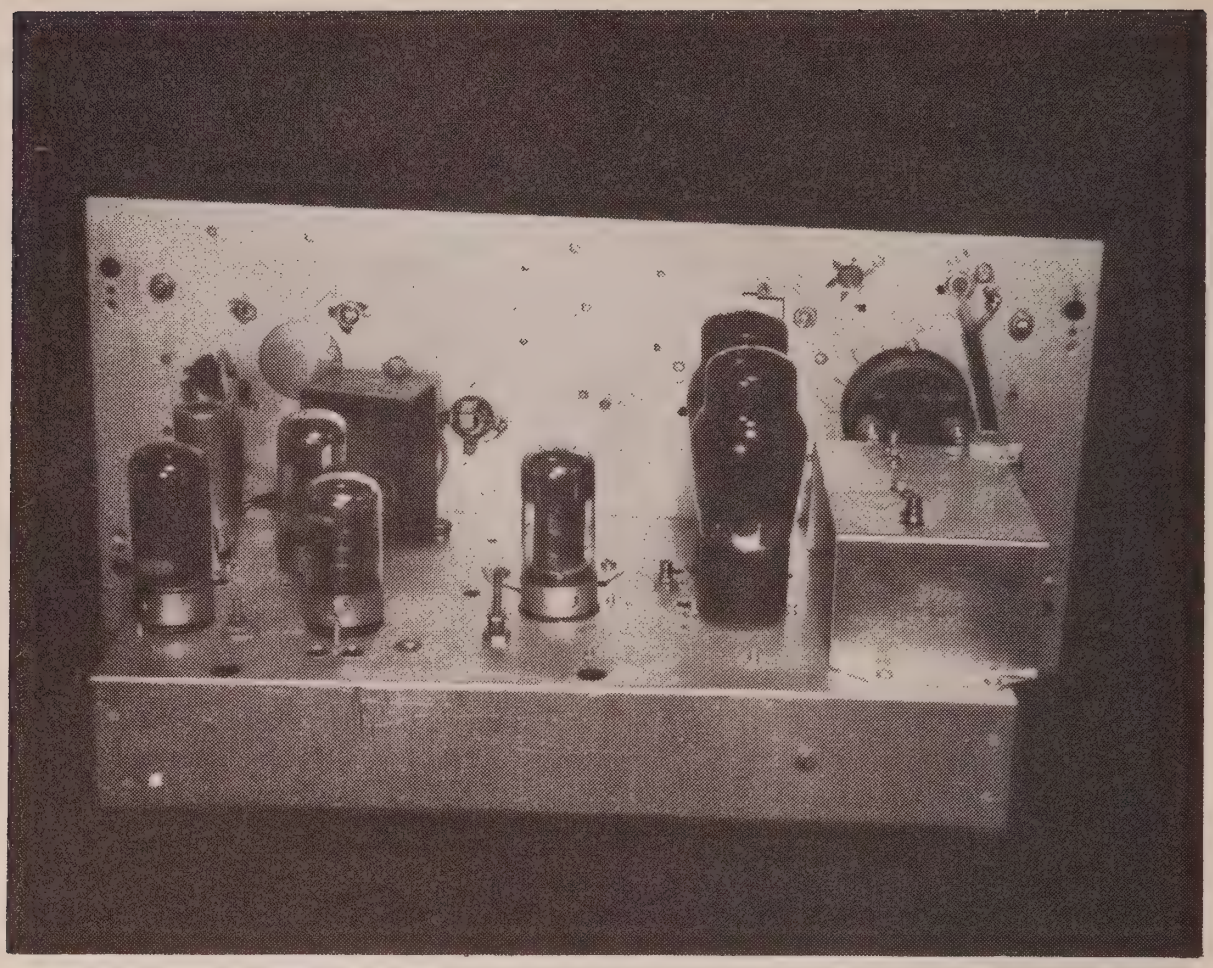

Fig. 3.7—Rear view of a 50 mc 20 watt d.s.b. transmitter. On a.m. it can provide about 7 watts, screen modulated. The 3-7C5's, (from l to r) oscillator, tripler and doubler, drive the two 6Y6's. The modulator, a 7C5, is on the left near the panel along with T_1. The 0B2 is the shielded miniature tube in the modulator area. The TVI filter is on the right and in front of the filter, is the r.f. output meter.

3.1C 6W6GB 50 MC Transmitter

The d.s.b. (double sideband suppressed carrier) transmitter illustrated in figs. 3.7, 8 and 9 is a low powered 50 mc set using an assortment of receiver type tubes. It can also be used as a screen grid modulated transmitter with an output of about 7 watts with regular a.m. signal output. The d.s.b. peak output should be around 20 watts, since both tubes are in service. For a.m., one tube has its heater supply open and it acts as a neutralizing capacity only for the "hot" tube. In d.s.b. both heaters are in service. (See fig. 3.10.)

The r.f. amplifier, a pair of 6Y6G tubes, has the grids in push-pull and the plates in parallel connection. When the filament of both tubes ar energized, no fundamental r.f. power output is possible. One cancels the other if both have the same screen grid voltage. However, if the screen grids are connected to a source of audio power with push-pull connection to the screen grids, double sideband suppressed carrier output takes place. The carrier will be completely suppressed if the tubes and circuits are exactly balanced.

All of the screen grid power is drawn from the audio amplifier. No d.c. supply is needed for d.s.b. operation. If a.m. is desired, a d.c. source of about 100 volts is needed, as shown in fig. 3.10. One r.f. tube is "cold" so takes no current on any electrode; it is merely a neutralizing capacitor for the active r.f. tube. This simplifies switching problems, so that a d.p.d.t. switch can be used to change from one type of modulation to the other.

The loctal tubes used in the exciter and modulator could have been octal equivalents, that is, a 6SJ7 and 6V6GT tubes, or miniature 6AU6 and 6AQ5 tubes. The 6Y6GB tubes were slightly better than 6Y6G tubes in tests made at a later period. A Pierce untuned crystal oscillator with an 8.33 mc crystal, drives a 7C5 tripler to 25 mc output. This in turn, through link coupled circuits, drives a 7C5 doubler to 50 mc. The output of the 50 mc (6Y6G) amplifier is coupled to a coaxial fed antenna through a small TVI filter from the pi network plate circuit. The small two section low pass filter is shown in fig. 3.8. The cut-off frequency can be adjusted to a value such as 60 or 70 mc for attenuation of harmonics of 50 mc. The two end capacitors are set at 40 to 30 mmf and the center capacitor at 80 to 60 mmf for 6 turn coils

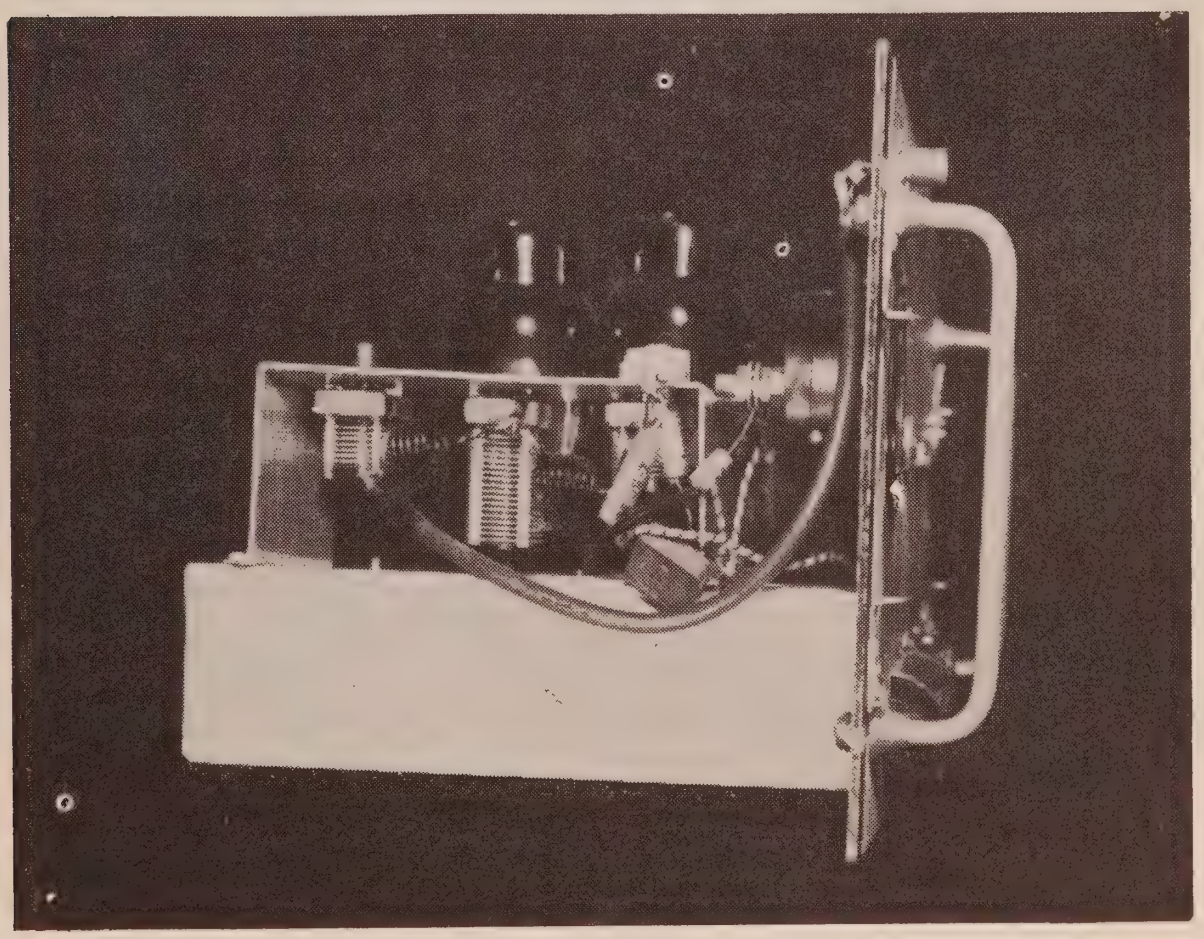

Fig. 3.8—Side view showing the TVI filter. The panel handles are from a surplus 375E transmitter. The original panel is covered with a blank aluminum plate to improve appearances.

Coil Data and Parts List for fig. 3.10

L_1, L_2—15t #22C, ½″ long, ½″ dia., iron slug.
L_3—7t #18E, ⅜″ long, ½″ dia.,
L_4—12t #18E, ⅝″ long, ½″ dia., center tapped.
L_5—5t #12E, 1½″ long, ¾″ dia.
L_6, L_7—6t #14E, ½″ long, ½″ dia.
RFC_1—1 mh.
RFC_2—Ohmite Z-50.
T_1—4K to 10K c.t. a.f. transformer.

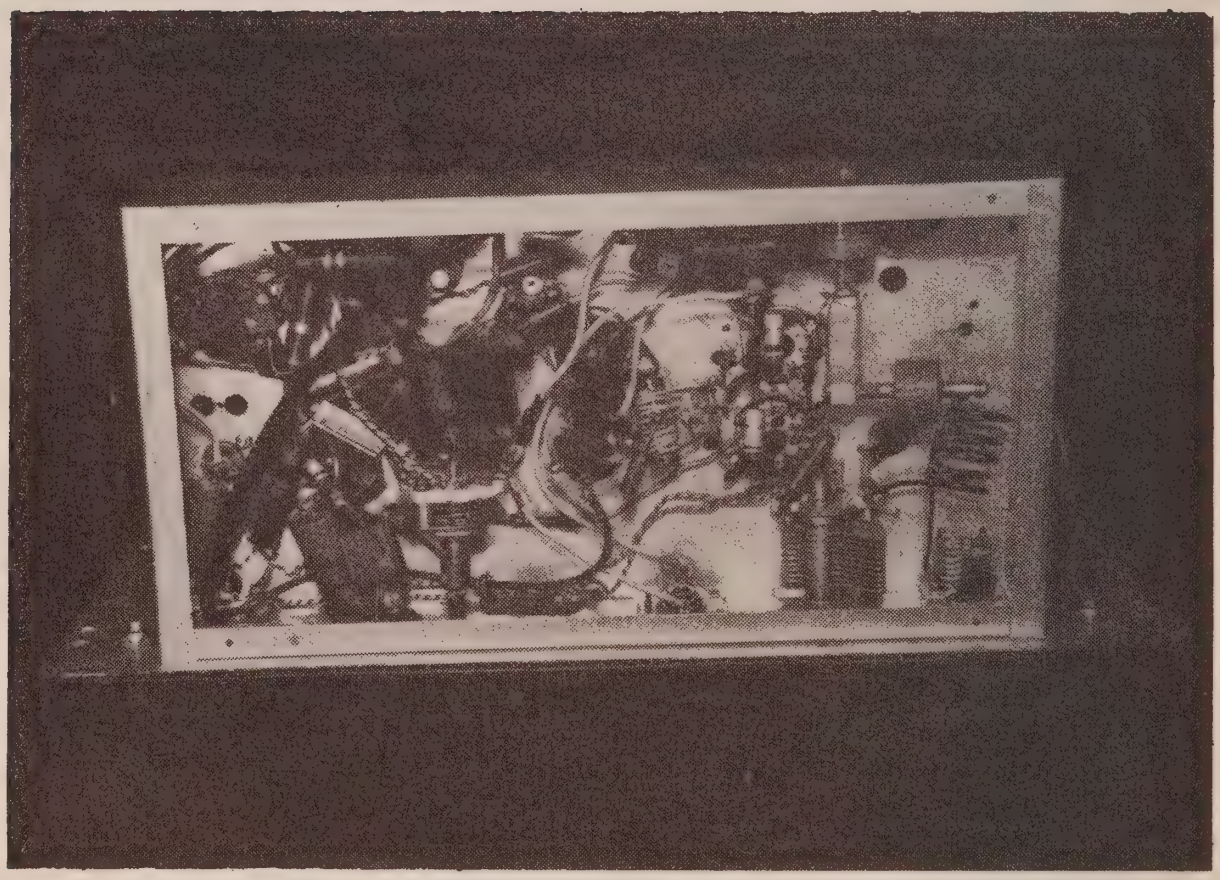

Fig. 3.9—Bottom view of d.s.b. transmitter. The pi output network is shown on the right. The crystals mounted on the switch on the left permit easy shifting of the frequency. The switch to the right is for a.m.-d.s.b. and the jack to the right is for the plate milliameter and is insulated from the chassis.

½ × ½ inch in size. The output capacitor can be reset a little in case the s.w.r. is more than unity in the coaxial feeder.

The r.f. output meter across the pi network circuit, fig. 3.10, is a diode voltmeter and monitor. Headphones plugged into the jack will provide a check on the a.m. signal. The d.c. milliametter indicates the carrier signal on

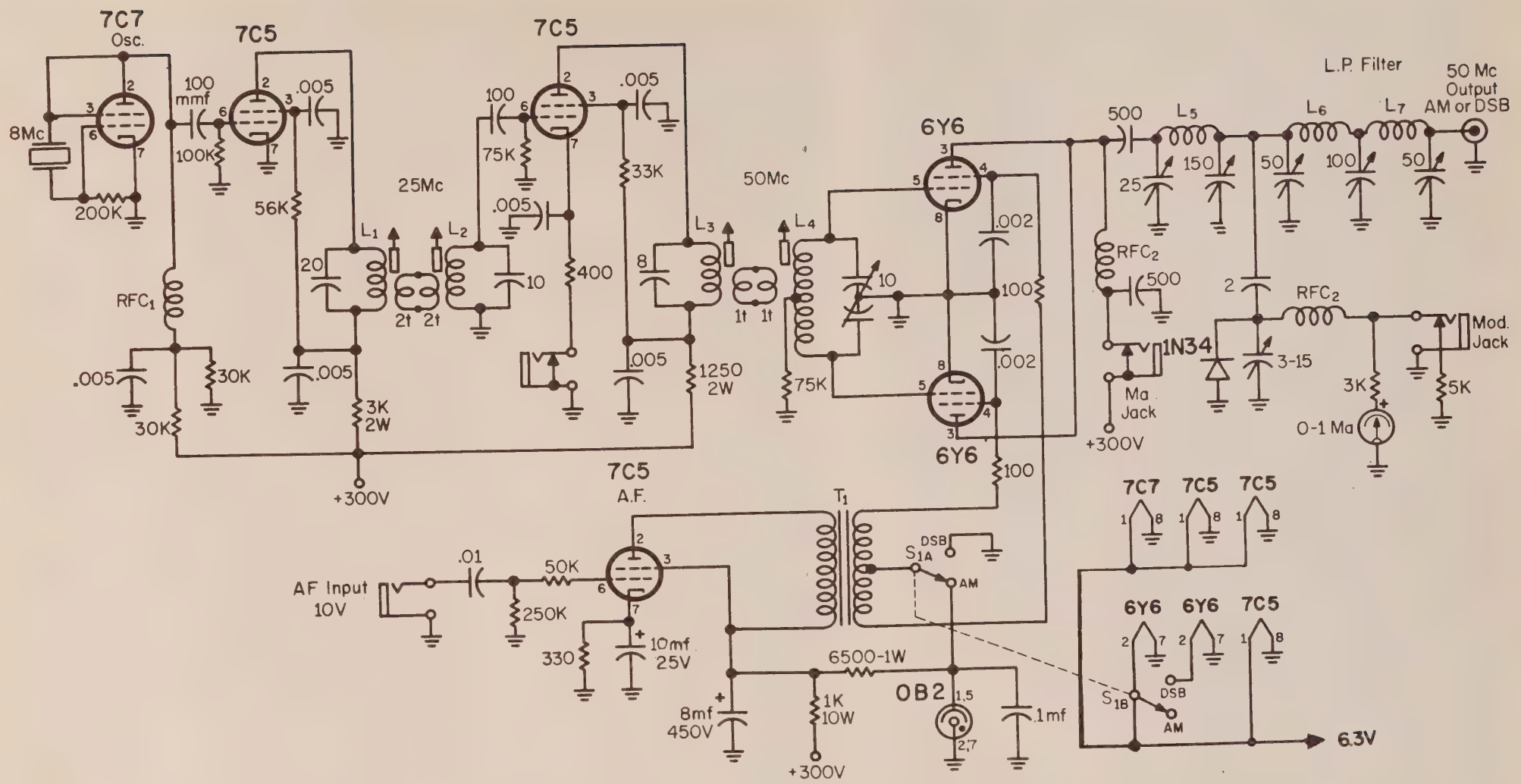

Fig. 3.10—Circuit of the 50 mc a.m.-d.s.b. transmitter. A separate audio preamplifier is required.

a.m. and the relative peak swing of side band power in d.s.b. operation.

In tune-up, the d.c. grid current through the 75K grid leak in the 6Y6G grid circuit should be from 1 to 2 ma and the d.c. plate current from 50 to 70 ma. These values are for heavy loading into the antenna.

The transmitter was built on a 13 × 7 × 2 inch aluminum chassis in order to fasten it into one of the many tuning unit cans recovered from BC-375E surplus transmitters. These cans or cabinets were fastened to the walls of the station and so provide a handy means of mounting exciters or transmitters. The panels for these cans have snap fasteners. The panels with many holes can be made presentable by mounting a thin sheet of aluminum on the front side under the four corners of the handles.

3.1D 50 MC Exciter

The 50 mc exciter shown in figs. 3.11, 12 and 13 is used to drive a pair of 4X150A tubes up to as high as 1 kw on c.w. The exciter has an output of 8 to 10 watts with a 300 volt power supply. A 6L6GB tube as a power doubler requires no neutralization. This shorter sized 6L6G tube has often been called the poor man's 6146. It works very well at 50 mc with plate voltages of 300 to 350 volts. The grid circuit (fig. 3.13) was link coupled

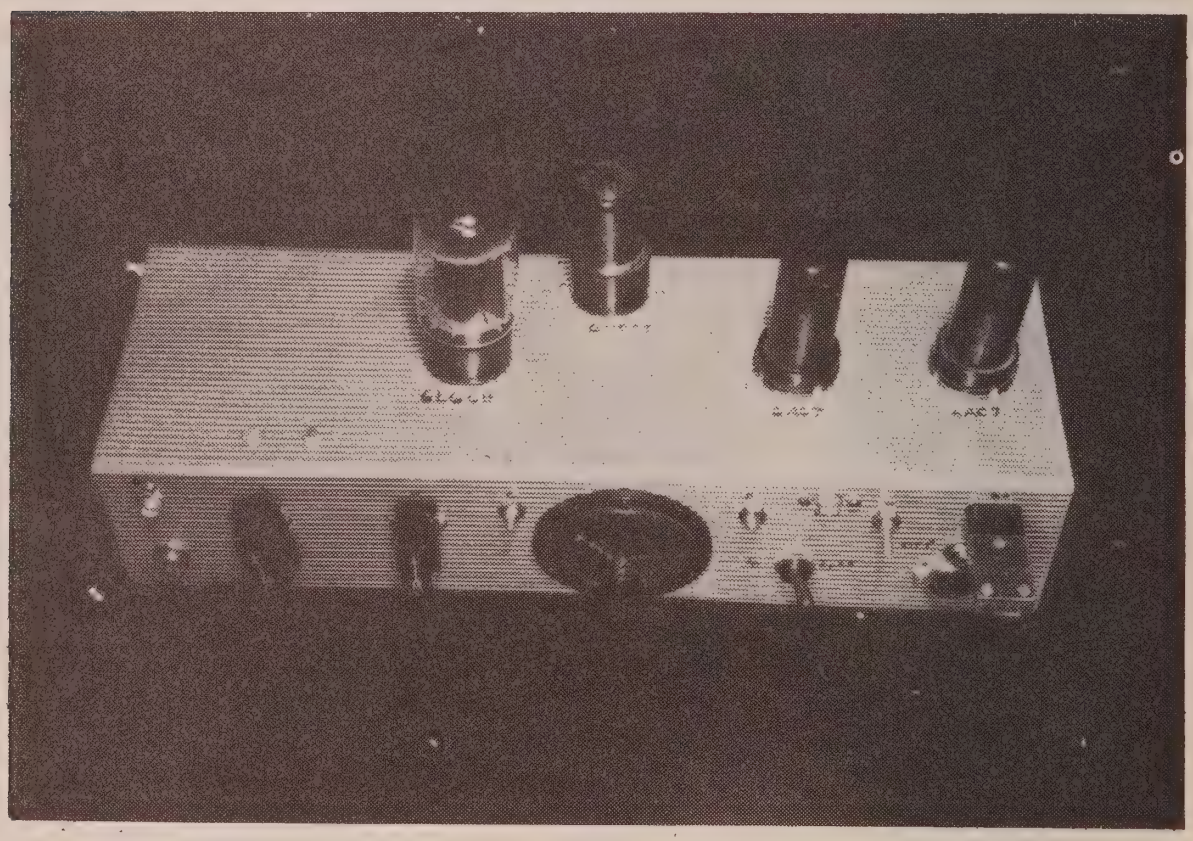

Fig. 3.11—Top from view of a 50 mc exciter used to drive a kw final. It has an output of 8 to 10 watts. The tube lineup from r to l is 6AG7 oscillator, 6AG7 multiplier, 6V6 clamp, 6L6GB power doubler. The front panel components are: upper left, r.f. output; lower left, key jack; antenna tuning, plate tuning; Ig—Ip meter; meter range switch, crystal and power plug. Coil L_1 is to left of the crystal, L_2 is to the upper right of the meter and L_3 is to the left. The jack above the meter range switch is for a 6 mc v.f.o. input.

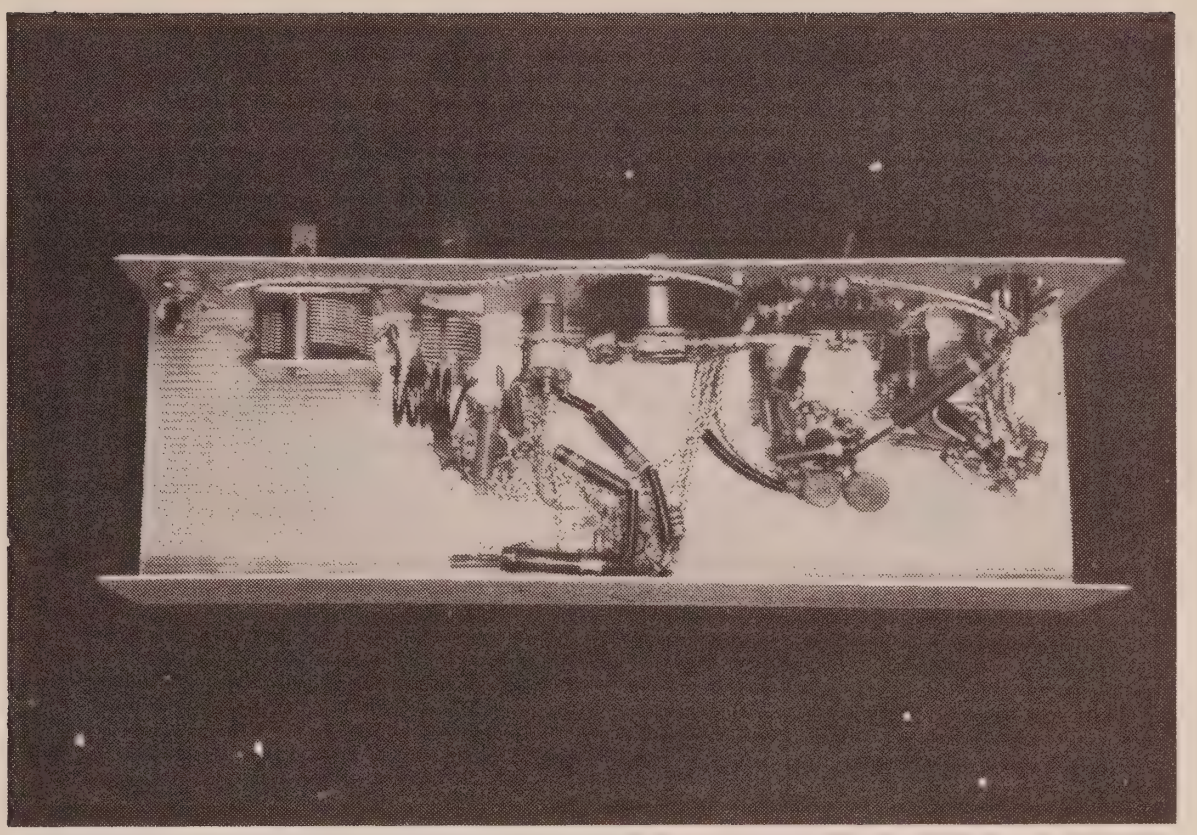

Fig. 3.12—Output pi circuit is shown on left. Note the link coupling loop between L_2 and L_3 running under the meter.

to a 6AG7 frequency doubler which has another 6AG7 doubler-oscillator driving it. The latter can be used with 8.33 mc crystals as an oscillator with a 12.5 mc resonant plate circuit, since the latter is a low *C* type with a fair impedance at 8.33 mc. In this case the second 6AG7 acts as a tripler to 25 mc. This compromise arrangement permits the use of 6.25 mc or 8.33 mc crystals without any readjustment. Type 6CL6 tubes may be used instead of 6AG7 tubes. The older type 6AG7's have a little more plate dissipation but are not as effective, so the actual r.f. output at higher frequencies may be greater with the miniature 6CL6.

The harmonic output of a "grid-plate" crystal oscillator of the form shown here is increased by adding a small capacitor from screen grid to cathode or ground. When this is done, the output is about the same as with other types of harmonic crystal oscillators. This oscillator has less r.f. heating of the crystal for equivalent screen voltages, which makes it desirable for VHF c.w. transmitters. The frequency drift is less, provided the d.c. screen voltage is of moderate or low value. This voltage should be regulated if the frequency multiplication to the final amplifier is more than 6 or 8 times.

In c.w. operation a vacuum tube keyer is plugged into the second 6AG7 cathode jack. A 6V6GT clamp tube in the 6L6GB screen circuit drops the screen voltage to a safe value during key-up periods when there is zero bias on the 6L6GB tube. Either cut-off fixed bias on the control grid or a clamp tube on the screen grid works equally well for c.w.

The 6L6GB plate circuit uses a pi network with a very large output variable capacitor. This provides an excellent excitation control to a final

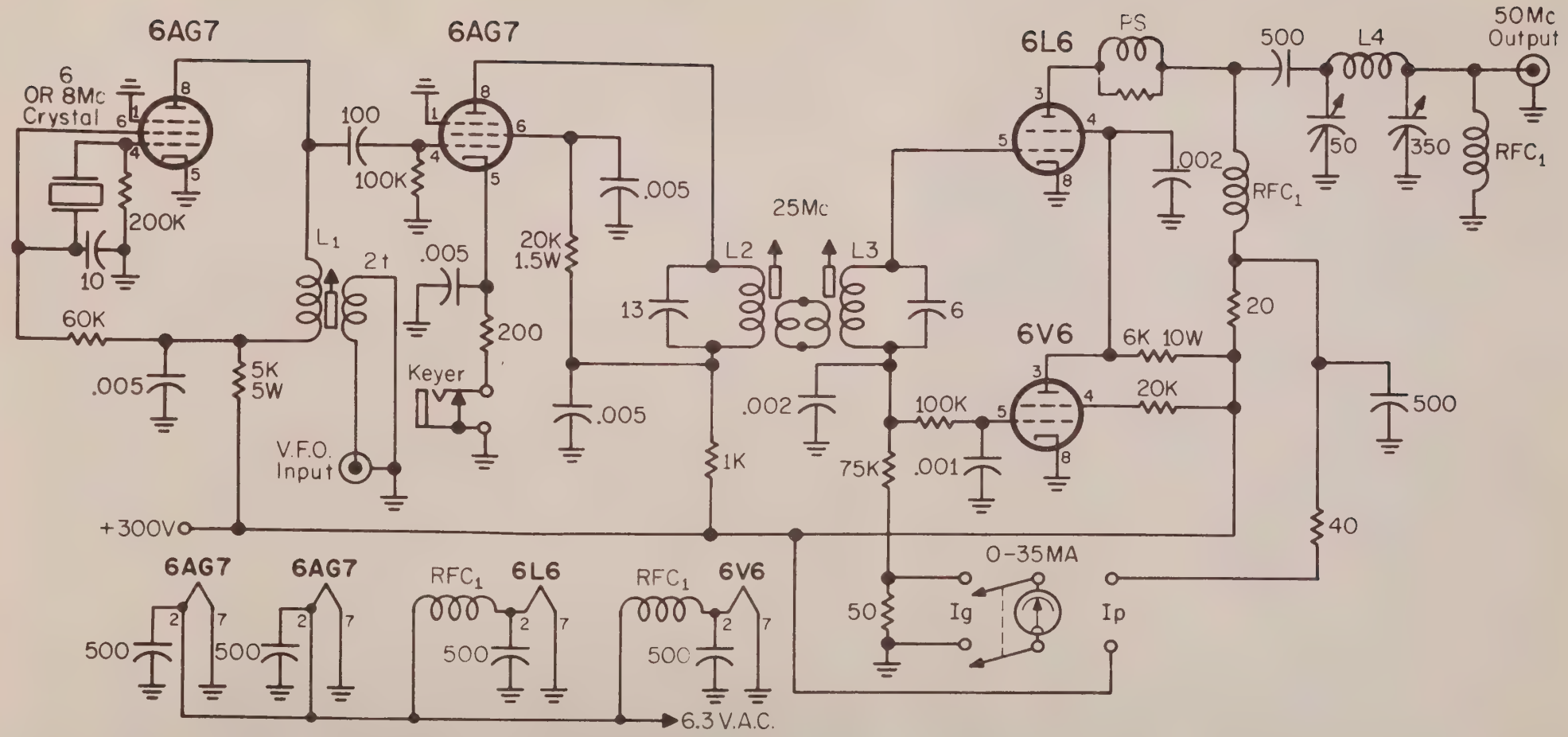

Fig. 3.13—Circuit of the 50 mc exciter used to drive a pair of 4X150A 's to a kilowatt.

Coil Data and Parts List for fig. 3.13 *(opposite page).*

L_1—27t #24E, ⅝" long, ½" dia., iron slug.
L_2, L_3—13t #20E, ½" long, ½" dia., iron slug.
L_4—5t #10 or 12, 1" long, ¾" dia.
RFC_1—Ohmite Z-50.

amplifier grid circuit. The plate tuning capacitor must always be adjusted for resonance or best plate current dip for any desired load conditions.

The exciter was built on a 5 × 15 inch chassis made by bending the sides over on a 15 × 10 inch piece of heavy aluminum sheet material. The exciter was finally mounted inside a metal cabinet with front panel. It is used as a driver for the final amplifier described in the next section.

3.1E High Powered 50 MC Amplifier

A high powered r.f. amplifier is illustrated in figs. 3.14 and 15 with the circuit in fig. 3.16. A pair of 4X150A tetrodes are used in parallel at 50 mc

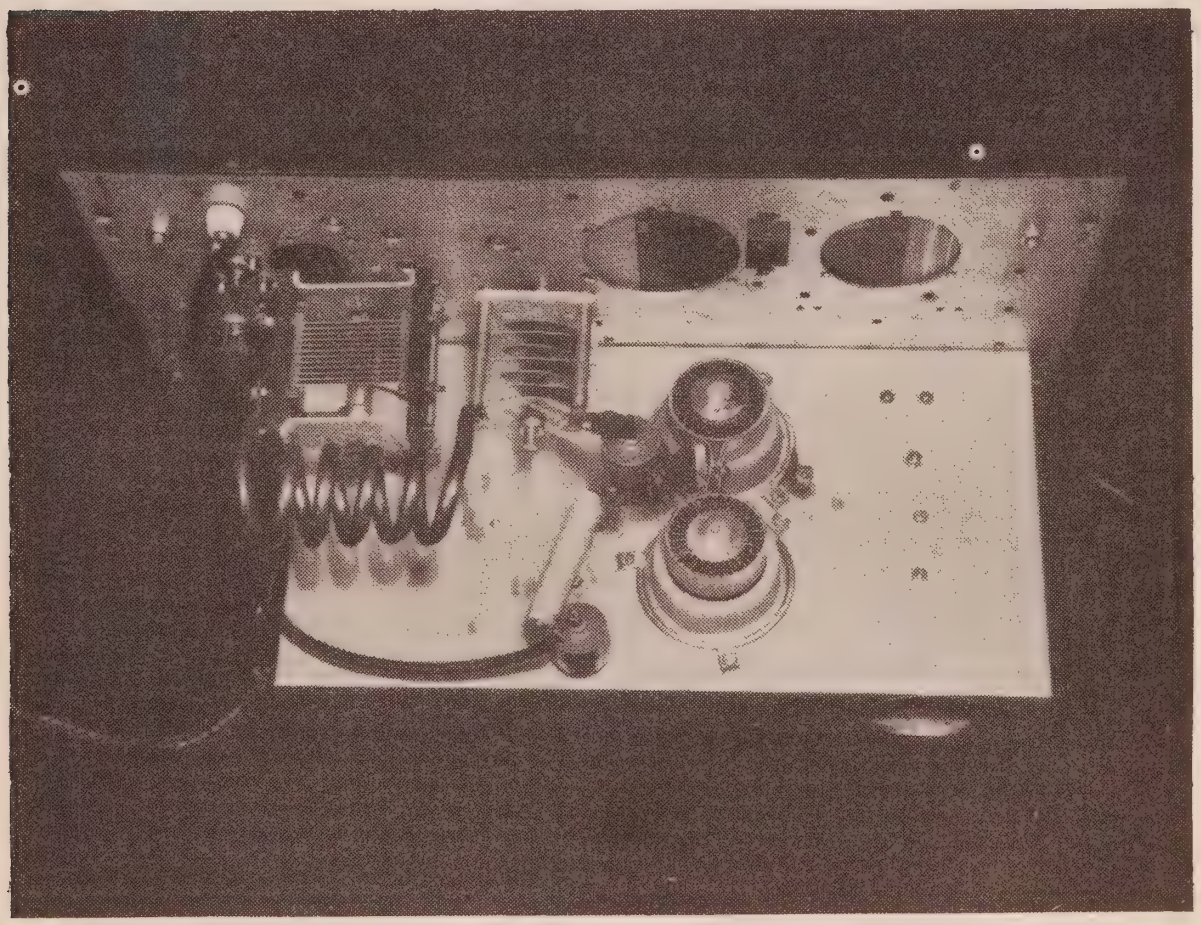

Fig. 3.14—Top view of the final using two 4X150A tetrodes in parallel. Pi network is shown on left. Home brew r.f.c. is mounted between the two 500 mmf barrel capacitors. Note small capacitor plate to right of upper tube, mounted on a feed through insulator.

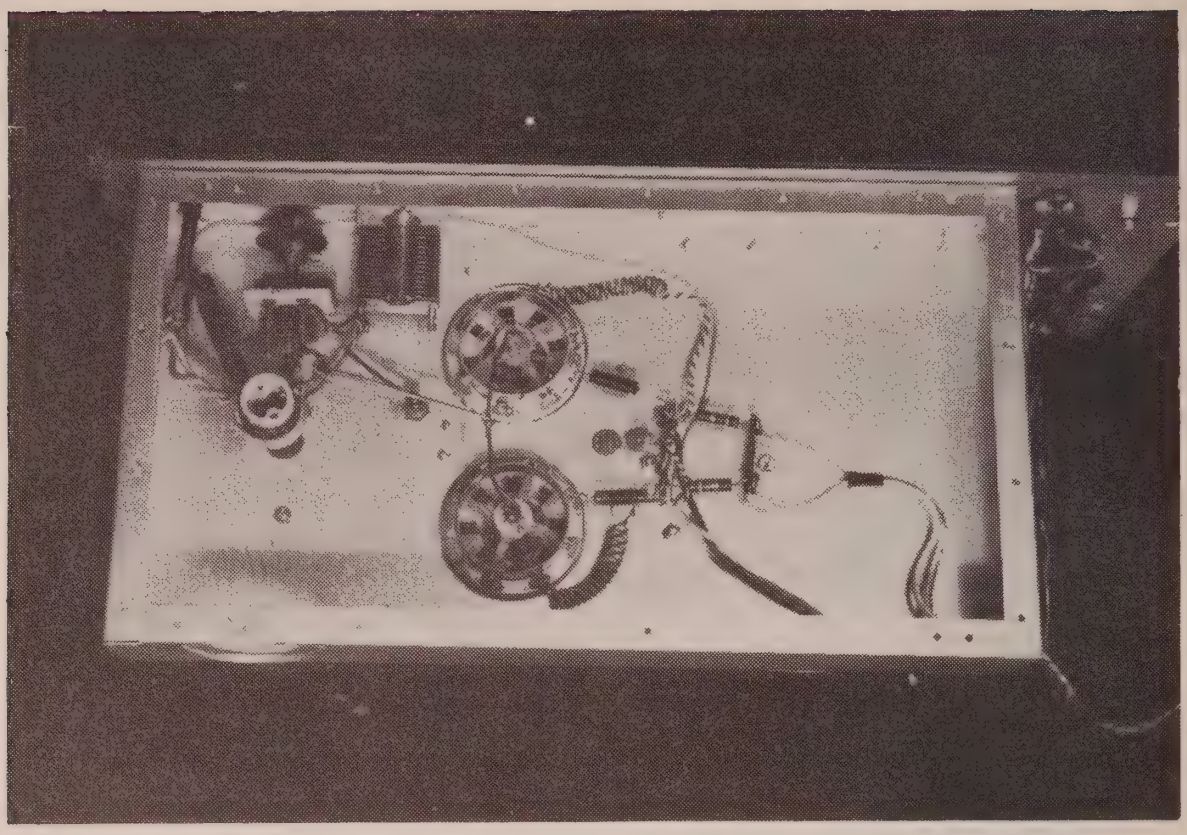

Fig. 3.15—Bottom view of the 4X150A final. Note feedthrough insulator from plate capacitor to the left of the upper tube. The right hand capacitor (10-200 mmf) is for neutralizing and the left one is grid tuning. The small r.f.c.s in the screens are explained in the text.

in order to couple into a coaxial line through a pi network tuning circuit. The plate current is fed through an r.f. choke to the parallel plates with d.c. blocking capacitor to the pi network. The usual small 50 mc radio frequency chokes blistered from r.f. heating so one was made which overcame this difficulty. It is visible in fig. 3.14 and constructional details are shown in fig. 3.16. The small r.f.c. across the antenna loading capacitor and coaxial line eliminated an occasional arc-over across this capacitor. The antenna and feeder system used a gamma match circuit with a series capacitor which caused a build up of d.c. voltage high enough to arc-over. A d.c. ground through this small 50 mc r.f.c. then makes the large ceramic bypass or d.c. blocking capacitor assume the full 2000 volt load, rather than dividing it between this capacitor and the pi tuning capacitors and gamma match capacitors at the antenna.

The tetrode tubes usually require some neutralization in order to be sure that maximum r.f. output and maximum d.c. grid current coincide. This neutralization is accomplished by a bridge circuit (fig. 3.16) in which a small capacitor plate near the plates of the tubes is connected to the grid circuit by-pass capacitor. If this capacitor is made variable (fig. 3.15 and 16) a setting can be found where the desired condition exists. Plate tuning adjustments then have no sudden effects on the d.c. grid meter readings. The 0 to 50 grid and 0 to 50 screen grid, and 0 to 500 ma plate meters are external to this amplifier. The amplifier is normally operated on c.w. with 30 ma of input grid current, 10 to 20 ma of screen current and 400 to 500

ma of plate current. With screen grid modulation for phone operation, the grid current is the same, but the screen current is usually near zero at this high plate voltage and heavy antenna loading is needed for modulation service. The actual d.c. screen voltage is from 150 to 180 volts for a.m. service and 250 to 300 volts for c.w. (depending upon the particular 4X150A tubes). The antenna loading is normally adjusted for maximum feeder power as indicated on an s.w.r. meter in the coaxial line on c.w. service. For phone operation (at lower screen voltage) the antenna coupling is increased (less capacity in the output capacitor in the pi network) until the antenna current reading drops off at least 10 per cent from its maximum reading at this value of screen voltage. Large values of screen current indicate insufficient antenna loading in any case.

The amplifier was originally built with a fixed value bypass capacitor in the grid circuit. Difficulties in neutralization led to installation of small 50 mc chokes in the screen leads to each socket. No benefits and no harm resulted so these chokes were left installed after the variable by-pass capacitor was wired into the grid circuit. Actually, a 200 ohm resistor from the screen supply to each socket screen terminal will function as well. These air-cooled sockets have a large effective screen grid bypass capacitor built into them which function at any frequency at which 4X150A or 4CX250B tubes will operate.

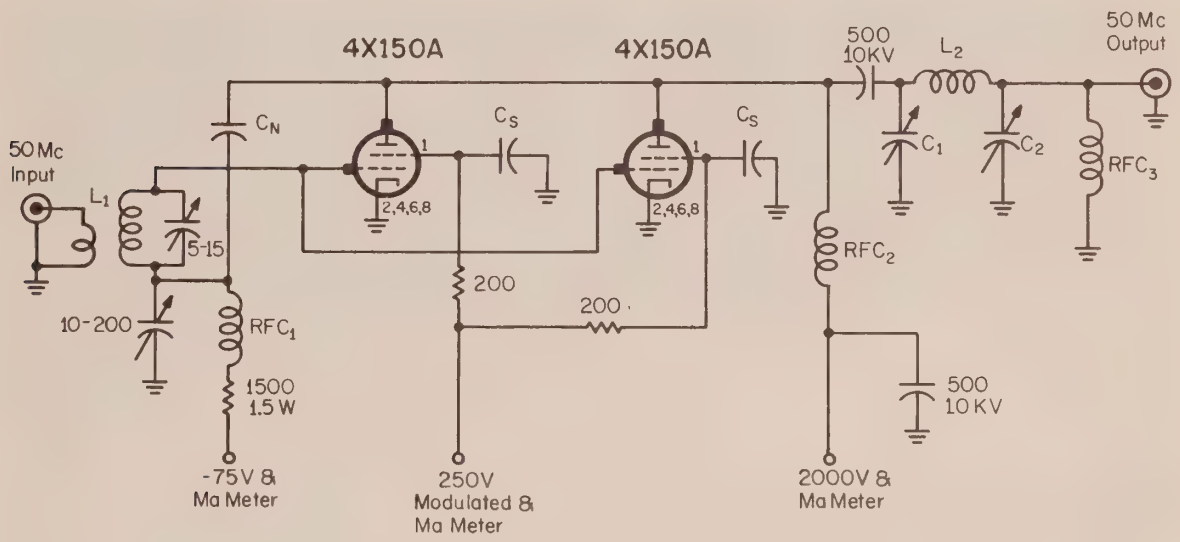

Fig. 3.16—Circuit of a high powered 50 mc amplifier.

C_s—Screen bypass built into socket.
C_n—Tab of sheet copper ⅜" W x ¾" long mounted on feedthrough insulator near tubes.
C_1—5-12 mmf, 0.2" gap.
C_2—10-250 mmf, 0.03" gap.
L_1—4t #14E, ¾" long, ¾" dia., with 1 turn primary.
L_2—5t ¼" copper tubing, 4" long, 1½" dia.
RFC_1—60t #30E on 2W, 2 megohm resistor.
RFC_2—40t #20C, 1¾" long, ½" diam. on ceramic form.
RFC_3—Ohmite Z-50 (May be used in screen leads also).

A 13 × 7 × 2 inch aluminum chassis with a 7 × 13 inch cover was used for the amplifier construction. A two inch diameter hole in the rear side is coupled through an air hose to a squirrel cage type of air blower for cooling the tubes. Ceramic collars around the screen grid portions of the tubes force the air flow up through the plate cooling fins of the tubes. The cabinet enclosing the complete amplifier should have plenty of ventilation holes or screened areas. A 375E tuning unit can and snap-in panel (surplus units) were used to house the amplifier. The unit was then fastened to a wall, with a hole through the wall, for connection to the blower. This eliminates a large portion of room noise but is somewhat destructive to walls, especially if similar amplifiers and blowers are used on many different amateur bands such as at W6AJF. The blowers with induction type motors create no receiver noise problems. The 100 or 120 cubic feet per minute (unloaded rating) blower will usually cool these tubes fairly well. The back pressure with air cooled sockets and reasonably tight grid compartment and hose connections, will greatly reduce the actual air flow and cause a large increase of blower noise in the room. A high speed blower seems to work better than slow speed types against this back pressure. This high back pressure often means that a blower will cool two tubes better than one since the back pressure is cut in two. Unfortunately, most squirrel cage blowers seem to have been designed for air cooling large cabinets which have little

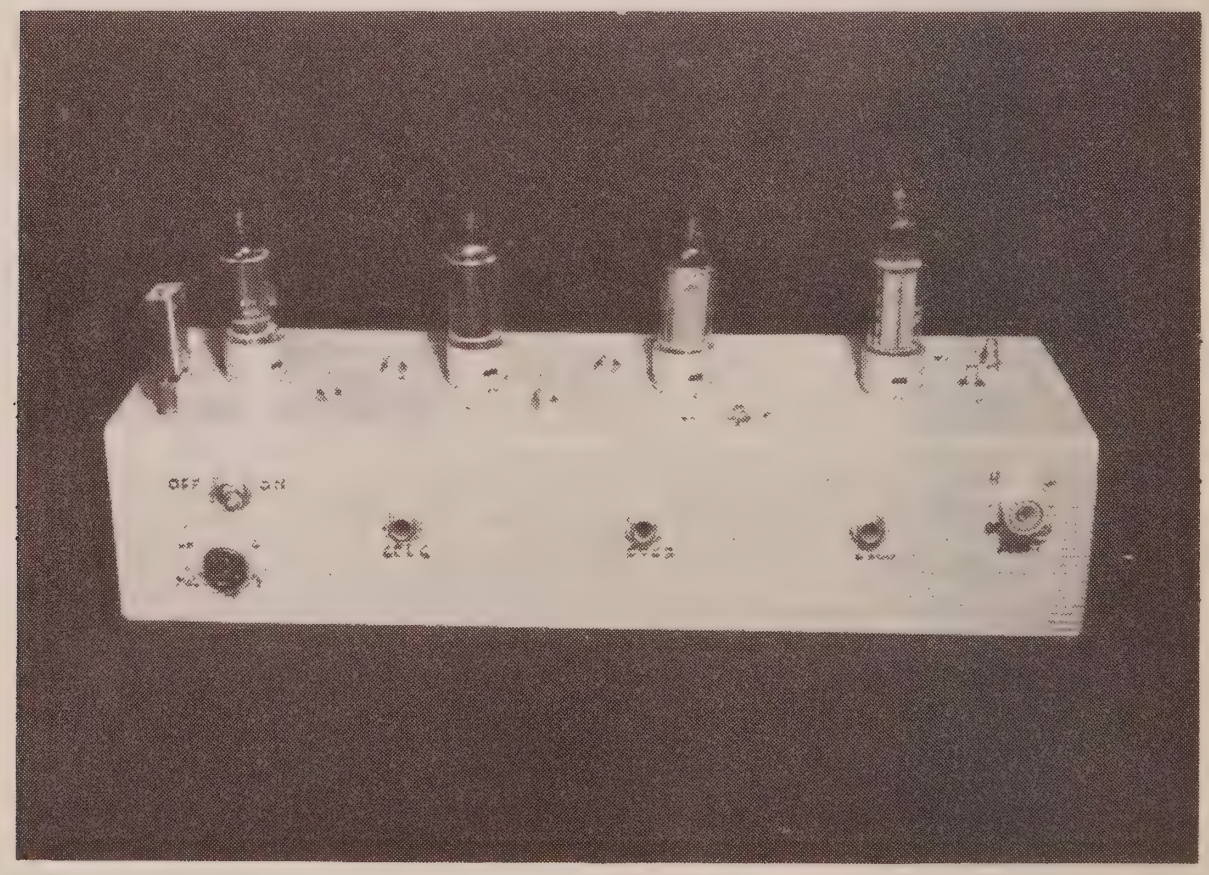

Fig. 3.17—A low powered 144 mc transmitter. From l to r, a 6 or 8 mc crystal, 6CL6 doubler, 5763 tripler and a 6360 dual tetrode final. To the right is the plate tuning capacitor and to the rear is the antenna tuning capacitor shaft. Front panel, l to r: power supply input with ON-OFF switch above, meter jacks and output connector.

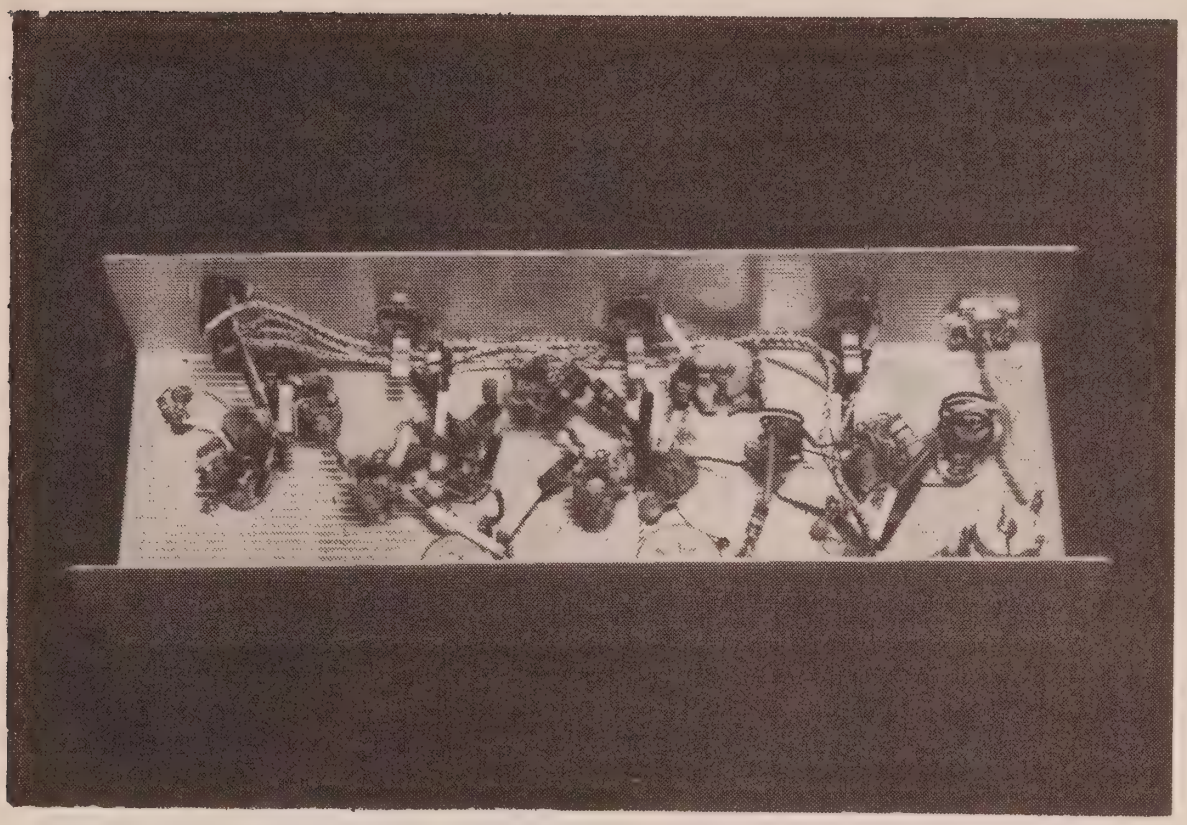

Fig. 3.18—Bottom view of 144 mc low power transmitter. Crystal socket is on left. Link coupled coils are visible between the oscillator, doubler and tripler. The two pots, just visible above the chassis lip, are for bias adjust on the tripler and final.

or no back pressure characteristics. It is a good plan to check the air flow out of the plate cooling fins with plate voltage turned off. It should be a fairly good stream of air in order to cool these little transmitting tubes.

3.2A Low Powered 144 MC Transmitter

The 144 mc transmitter shown in figs. 3.17 and 18 may be used with any plate modulator having an output of about 10 watts. A 200 ma plate supply at 250 volts is suitable for the r.f. unit. A carrier output of up to 10 watts can be obtained from the 6360 dual tetrode. At low plate voltages, this little tube will outperform the type 832A dual tetrode, and neutralization is much easier, if needed at all. This transmitter may be used to drive a large final amplifier in Class C operation. A 500 watt amplifier with a pair of 4X150A tubes or a 4CX300A can be driven with this power at 144 mc. Coupling losses and grid circuit problems are increased with frequency increase. A 50 mc amplifier is easier to drive than a 144 mc amplifier in practice. By very careful design and construction, 8 to 10 watts of r.f. power will drive an 800 or 900 watt 144 mc amplifier, but usually it is easier to use a larger exciter with 15 or 20 watt rating. It is more practical to reduce excess grid drive than to try to obtain a little more out of a small exciter.

This low powered transmitter is about right in power capability for general 144 mc band operation. This power of 8 to 10 watts will work over distances of 50 miles, and under favorable conditions much greater distances. This assumes good antennas and good receivers.

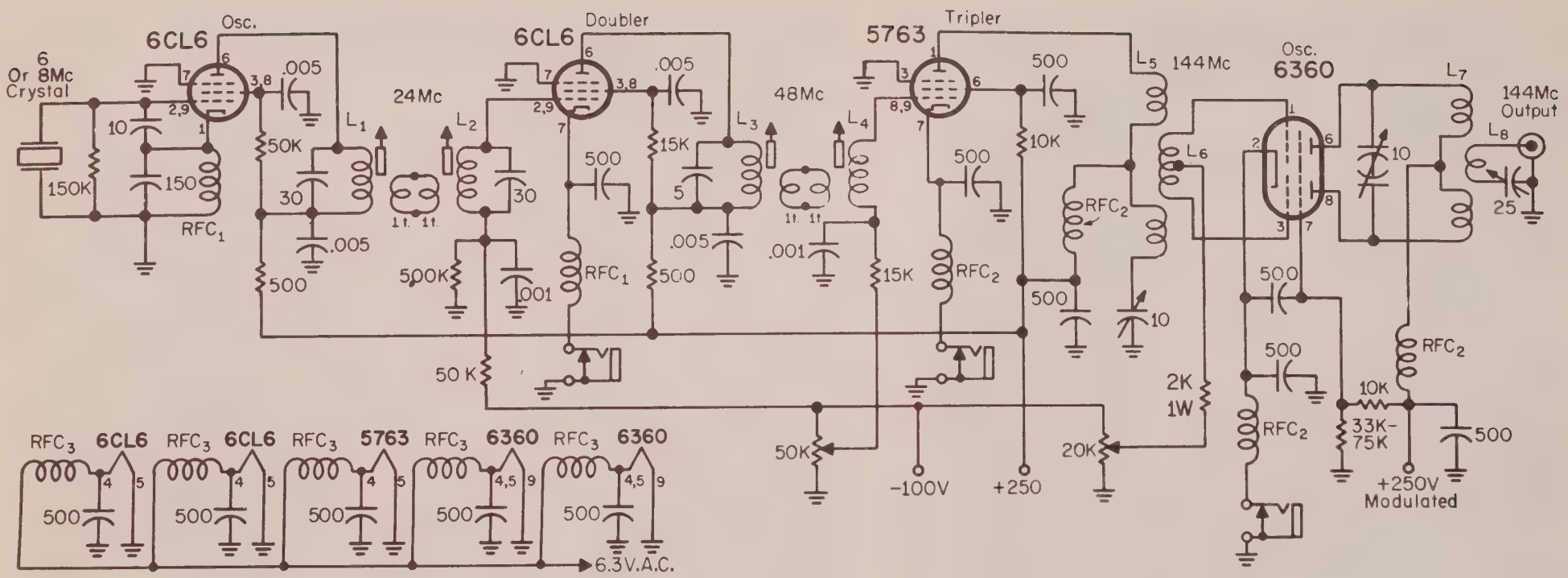

Fig. 3.19—Low powered 144 mc transmitter capable of 10 watts output. It may be plate modulated with 10 watts of audio.

L_1, L_2—9t #22E, ⅜″ long, ½″ dia., iron slug.
L_3, L_4—7t #22E, ⅜″ long, ½″ dia., iron slug.
L_5—4t #16E, ⅝″ long, ½″ dia., center tapped.
L_6—3t #20C, ¼″ long, ½″ dia., center tapped, in center of L_5.
L_7—4t #14E, ⅝″ dia., center tapped.
L_8—1t #14E, ⅝″ dia. in center of L_7.
RFC_1—1 mh.
RFC_2—Ohmite Z-144.
RFC_3—6 turns hookup wire, coiled 1/16″ dia.

The circuit, fig. 3.19, consists of a 6CL6 crystal oscillator-tripler or quadrupler driving a 6CL6 doubler, then a 5763 tripler to the 144 mc band, and finally a 6360 r.f. amplifier. Double tuned circuits between all stages are easier to adjust than single circuits for covering several megacycles of band width at the final output. If a bandwidth of 3 mc at 144 mc is desired, this means 1 mc at 48 and 0.5 mc at 24 mc, or the same value of circuit Q at each band of frequencies. Tube capacities can be more easily absorbed by the LC circuits if each stage has its own circuits. Coupling can be accomplished by capacitive or inductive means. Link coupling and inductive coupling between two resonant circuits are both forms of inductive coupling. At 144 mc, direct inductive coupling is more convenient to build and adjust than link coupling. Link coupling is used at the lower frequencies between each slug-tuned coil circuit in coupling from plate to grid. Figure 3.19 shows this arrangement and the circuit values used in this transmitter.

A piece of heavy sheet aluminum 15 × 11 inches is bent in a vise with the aid of two pieces of angle-iron and a mallet. The sides are bent down to form a chassis 5 × 15 inches. The whole r.f. unit is finally mounted inside of a metal cabinet to complete the r.f. shielding. For convenience in tuning for maximum output across the 144 mc band, a right angle drive with insulated shaft-coupler is needed on the final plate tuning capacitor. The latter was mounted in the chassis with the rotor insulated from ground to prevent arc-over during voice modulation peaks. The crystal should also be mounted on the front side of the chassis for access if more than spot frequency operation is desirable. The other tuning controls may be adjusted so as to cover most of the 144 mc band without resetting for crystal changes. Crystals from 6000 to 6166 and 8000 to 8222 kc are suitable for multiplication into the 144 to 148 mc band, by factors of 24 and 18 respectively.

Adjustment of the transmitter is considerably simplified if each circuit is measured with a grid dip oscillator with the tubes in place but without link coupling between coils. The slug coils can be slightly reset when tuning up the transmitter with links and with power applied. The last check requires a field strength meter coupled to the antenna or an s.w.r. meter in the output line, used as a power measuring indicator. In this transmitter, the first two circuits are tuned to a little above 24 mc with the aid of the grid dip meter. The second pair of circuits are individually tuned to 48.66 and the other circuits to about 146 mc. The final grid coil is self resonant near or in the 144 mc band and its coupling into the driver plate coil should be determined by putting a d.c. milliameter in series with the grid leak lead to the bias control. This should read about 3 or 4 ma for normal operation. Cathode jack current readings of 20 to 25 ma in the 6CL6 stage, 35 to 45 ma in the 5763 stage and about 80 ma in the 6360 stage are typical values. The C bias supply of 90 or 100 volts furnishes grid bias to three stages by means of fixed or variable voltage dividers. The two variable bias adjustments could be two fixed resistors once the proper operating voltages and currents are found. The C bias supply current is slightly less than 10 ma. The total plate current drain at 250 volts is slightly over 150 ma. A separate B-plus connection to the final amplifier tube is needed in order to connect the audio modulator transformer secondary winding in series with the 250 volt supply.

If this supply voltage is much different in value, the screen grid resistors to all stages should be changed so as to produce the approximate values of current listed previously.

3.2B 144 MC Exciter

The exciter or small transmitter illustrated in figs. 3.20 and 21 is a design suitable for driving a ½ or 1 kw final amplifier with type 4CX250B or similar tubes. The 6146 tetrode with 300 volt plate supply will furnish an output of a little more than 15 watts, necessary for the average high powered final amplifier of the tetrode tube types. The 6146 is not too efficient at 144 mc and its output is only a little greater than a 6360 (with half as much input power). The small dual triodes such as a 6524 are more efficient but more costly. A 6360 can be made to do the job but is somewhat overloaded. The experiments finally narrowed down to a 6146 tetrode as a compromise type.

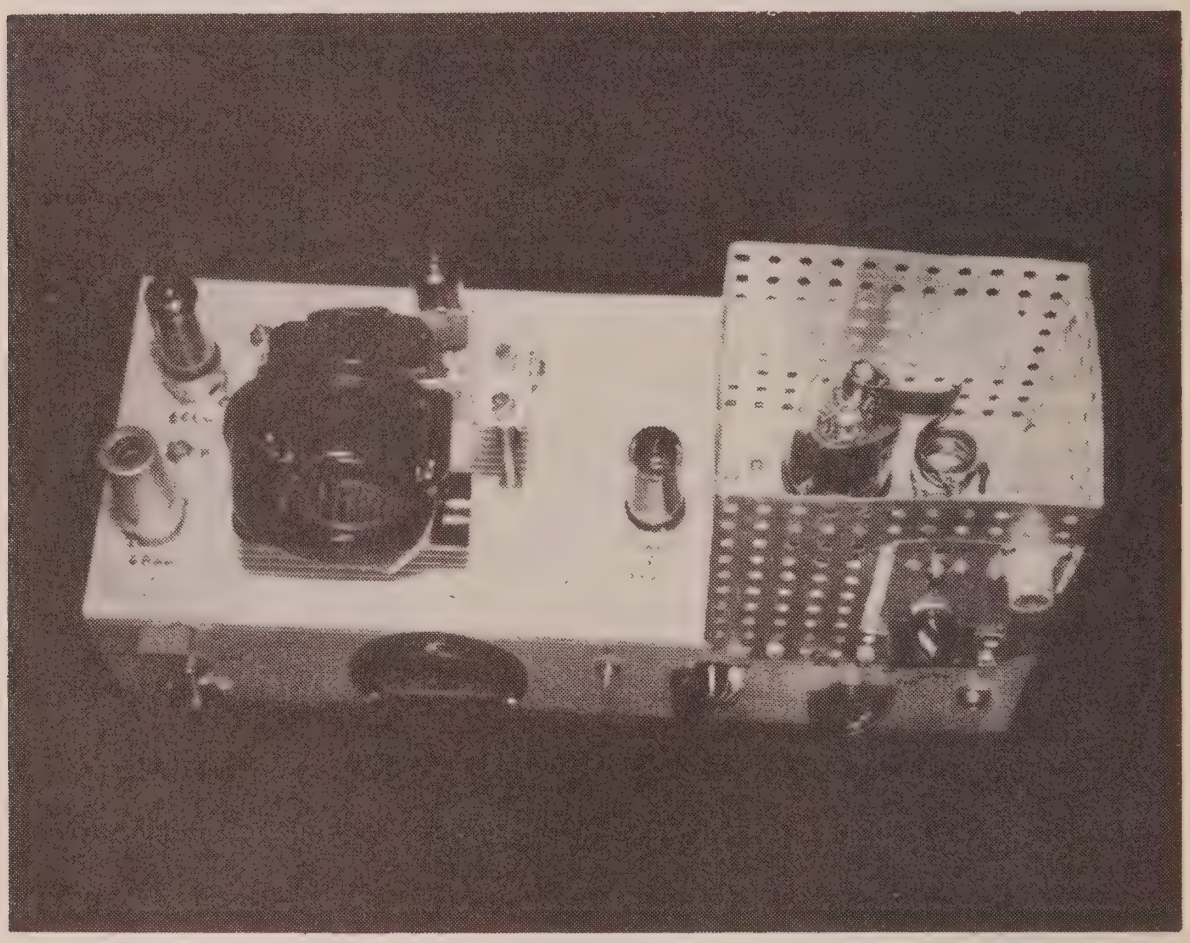

Fig. 3.20—A 15 watt exciter, employing a 6146 in the output, that can be used to drive a ½ or 1 kw rig. The top layout, from l to r, is: front—6BH6 crystal oscillator, to rear—6CL6 doubler, behind blower—5763 doubler, alongside final—5763 tripler and 6146 in cage. Front panel, l to r: crystal socket, below, ON-OFF switch and power input, tuning meter, 5763 tripler grid slug, 5763 plate tuning, meter switch and key jack. Output plate and antenna tuning capacitors are mounted on the cage.

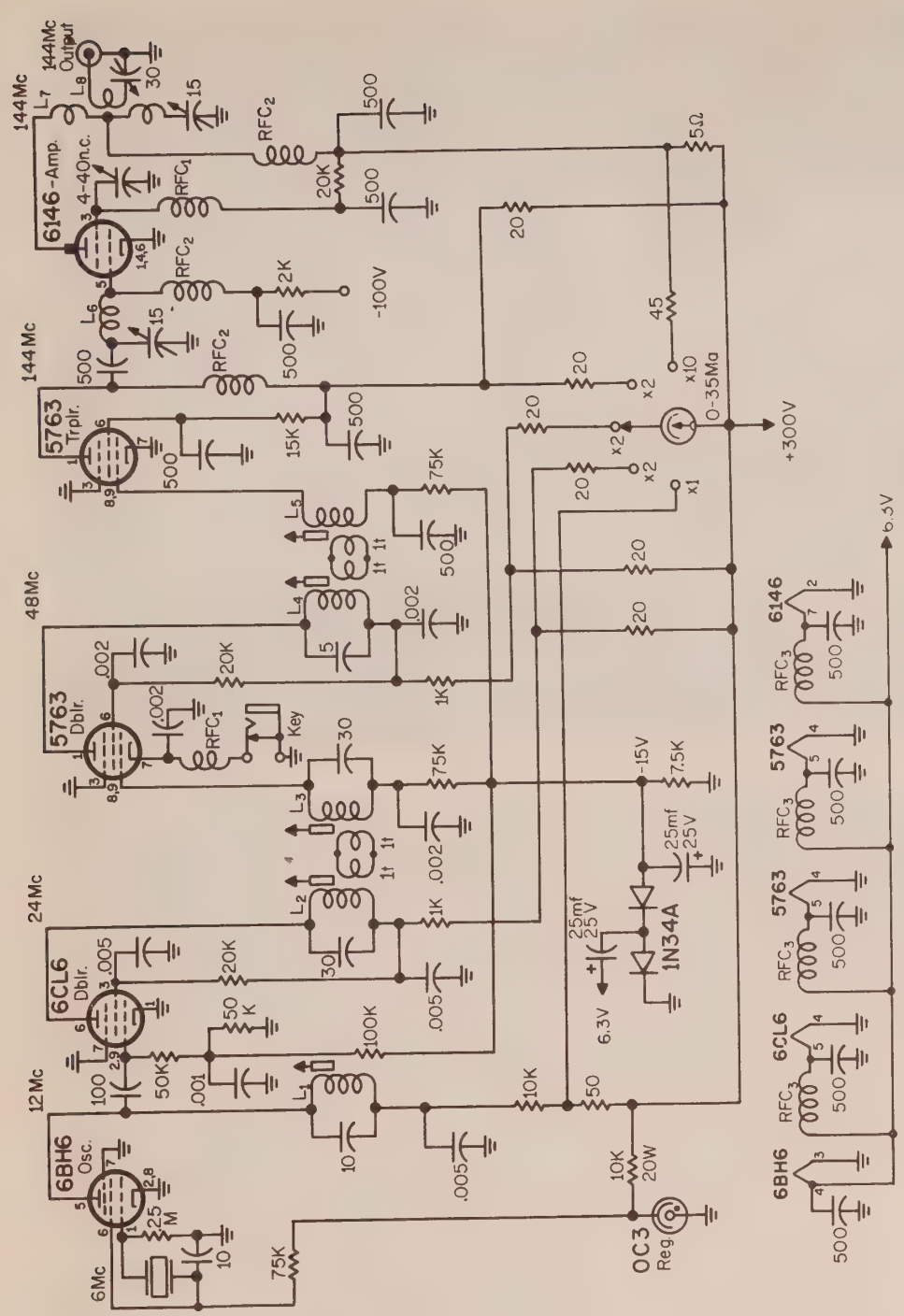

Fig. 3.21—Circuit of a 15 watt, 144 mc exciter.

L_1—19t #26C, 3/8" long, 1/2" dia., iron slug.
L_2, L_3—9t #22C, 3/8" long, 1/2" dia., iron slug.
L_4, L_5—7t #22C, 3/8" long, 1/2" dia., iron slug.
L_6—5t #14E, 3/4" long, 1/2" dia.
L_7—4t #10E, 3/4" long, 5/8" dia., center tapped.
L_8—1t #14E, 5/8" dia., in center of L_7.
RFC_1—Ohmite Z-50.
RFC_2—Ohmite Z-144.
RFC_3—6t hookup wire, coiled 1/16" dia.

The circuit is shown in fig. 3.21. A low powered crystal oscillator-doubler (type 6BH6 tube) is used with 6 mc crystals to drive the second doubler from 12 to 24 mc. The larger 6CL6 tube was used here to provide a power gain in this frequency doubler. The 5763 doubler to 48 mc then easily drives the tripler stage to get up to 144 mc. This 5763 tripler stage is connected through a pi network circuit to the grid of the 6146 r.f. amplifier tube. This tube has to be neutralized by series tuning the screen grid lead inductance with a series variable capacitor. A small mica compression capacitor (fig. 3.22) across the socket terminals of the 6146 tube is adjusted in final tune up to a point where the final plate tuning variations have minimum effect

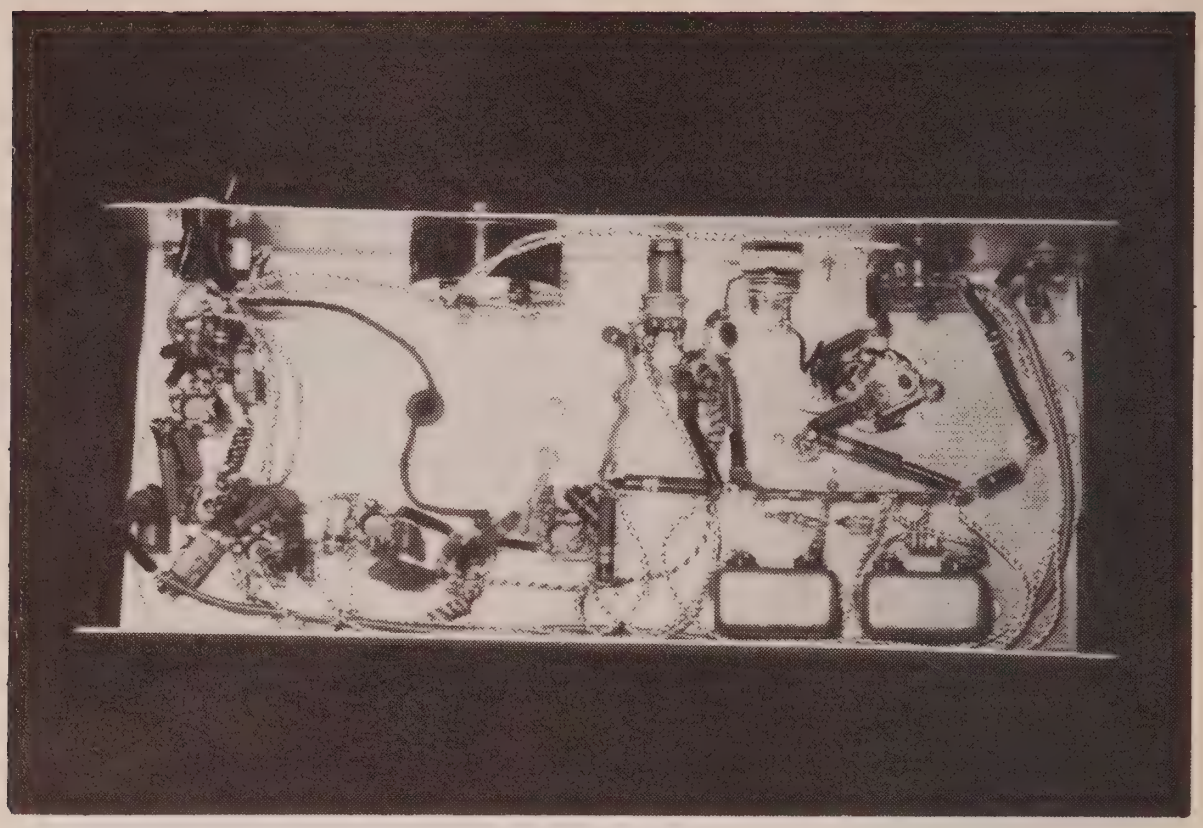

Fig. 3.22—The bias rectifiers, IN34A's, are located in the lower right of the chassis. Above the rectifiers is the access cutout for the 6146 socket. The trimmer is a 4-40 mmf neutralizing adjustment. The 0C3 regulator shown in fig 3.21 was added later and does not appear in the photos.

on the d.c. grid current. If this adjustment is done at 146 mc, the amplifier will be stable over the whole band. The d.c. grid current reaction will be increased at frequencies very much removed from 146 mc.

The exciter is built on a 15 × 6 × 2½ inch chassis. The 6146 tube socket is mounted above the chassis to minimize cathode-plate r.f. current reaction into the grid circuit. A perforated shield can of Reynold's sheet aluminum is put around this tube and its plate circuit. A small blower, made from a surplus 400 cycle squirrel cage blower, and a 115 volt 60 cycle phonograph motor is used to cool the 5763 tripler and 6146 tubes. An 0C3, 150 volt regulator tube was added towards the rear edge of the chassis at a later date in order to cure a keying chirp on c.w. due to power supply reaction back into the screen grid of the crystal oscillator. This change is shown in the circuit diagram fig. 3.21.

A small voltage doubler system with a pair of 1N34A diodes is connected to the 6.3 volt heater supply to provide about 15 volts of negative bias to some of the exciter tubes. The 6146 grid bias lead is connected to an external 50 to 120 volt variable bias supply as a means of protecting this tube and as an excitation control of r.f. output to the final amplifier grid circuit.

Exciter alignment procedure is similar to that described in Section 3.2A. Typical plate current readings are as follows: 6BH6 oscillator 5 ma, 6CL6 doubler 15 to 20 ma, 5763 doubler 30 ma, 5763 tripler 30 to 40 ma and 6146 amplifier, 100 to 150 ma. The latter depends upon the amount of r.f. loading and the d.c. grid current which ranges from .25 to 2 ma.

3.2C High Power 144 MC Amplifiers

The push-pull 4CX250B amplifiers illustrated in figs. 3.23, 24 and 25 are 144 mc amplifiers which have been in service for a long period of time at W6AJF. The unit in fig. 3.23 and 24 with its circuit in fig. 3.26 has been used with screen grid modulation with the plate input at 500 watts. The other amplifier, fig. 3.25, has been used for a 1 kw c.w. transmitter with horizontal beam antennas in an area where 144 mc operation has been vertically polarized.

The two amplifiers are electrically similar with slight variations in mechanical construction. The amplifier in fig. 3.25 is built into a 6 × 7 × 12 inch aluminum box for the plate line system and a 7 × 11 × 2 inch closed in chassis for the grid circuit. The latter is identical to that used in the other amplifier, fig. 3.24. The plate line of the amplifier in fig. 3.25 is made by folding a 17 inch long piece of silver-plated tubing, ½ inch in diameter, into a long U shape 1⅜ inches center to center. A wide spaced (about .175 inch gap) split stator plate tuning capacitor is mounted on bakelite insulators under the plate line. The two stator plates in each section connect to the plate line and the rotor plates are on a common shaft insulated from ground. The probable capacity of this capacitor per section is around 3 to 6 mmf.

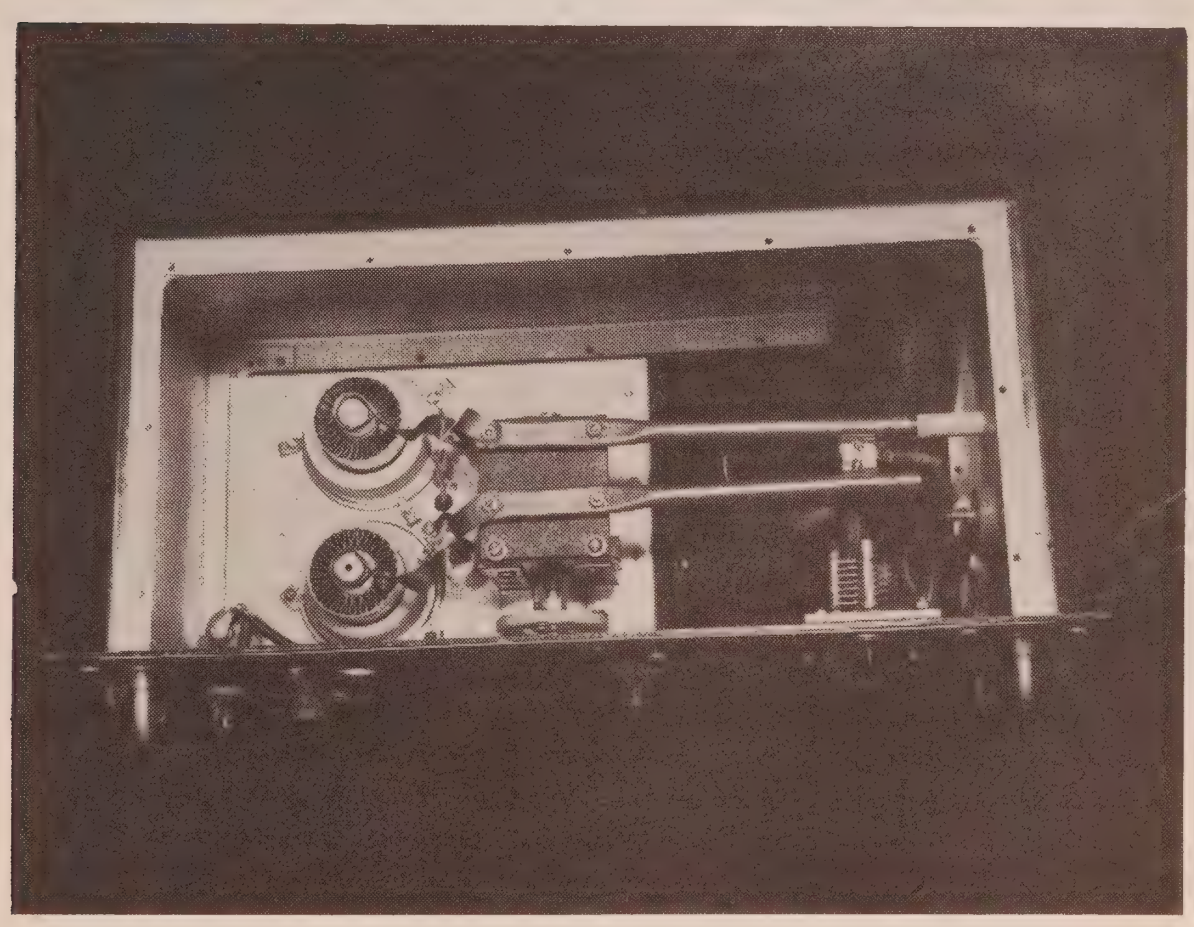

Fig. 3.23—Push-pull 4CX250B amplifier for 500 watts input, screen grid modulated. The plate tuning capacitor connected to the lines is a modified Cardwell neutralizing capacitor. The Ohmite r.f.c. is connected from the shorting strap on the end of the lines to the 500 mmf barrel capacitor. The output tuning capacitor is on the right of the front panel.

The plate tuning capacitor of fig. 3.23 is made from a large Cardwell neutralizing capacitor having an air gap of about .2 inch between rotor and stator plates. It is rebuilt into a split stator type by sawing out the center half inch of the stator mounting bars (on each side of the center). The probable range per section is 3 to 5 mmf or less. An adjustable sliding short on the plate lines is used for preliminary adjustments to reach 145 mc with a grid dip oscillator procedure. This is with the plate tuning capacitor at mid-scale. The amplifier can then be tuned over the 144 mc band with a dial on the insulated rotor shaft of the tuning capacitor.

The grid circuit of both amplifiers is self resonant at the low end of the 144 mc band. A piece of copper 10 inches long and 7/16 inch wide is formed into a modified parallel line circuit shown in fig. 3.24. The input link of number 18 insulated hook-up wire is tightly coupled (actually tied with nylon cord) to the grid line and its series tuning capacitor is used to resonate the grid circuit to any spot in the 144 mc band. A lower impedance circuit design would be more efficient and probably permit the use of a 6360 exciter in place of the larger exciters in the present transmitters.

The amplifier in figs. 3.24 and 25 is built into a shield can approximately 15 × 7 × 6 inches in size, with an enclosed 7 × 7 × 2 inch chassis for the air pressure system around the grid circuit. Air flow in both amplifiers is up through the sockets and tube chimneys and plate cooling fins. The tops of

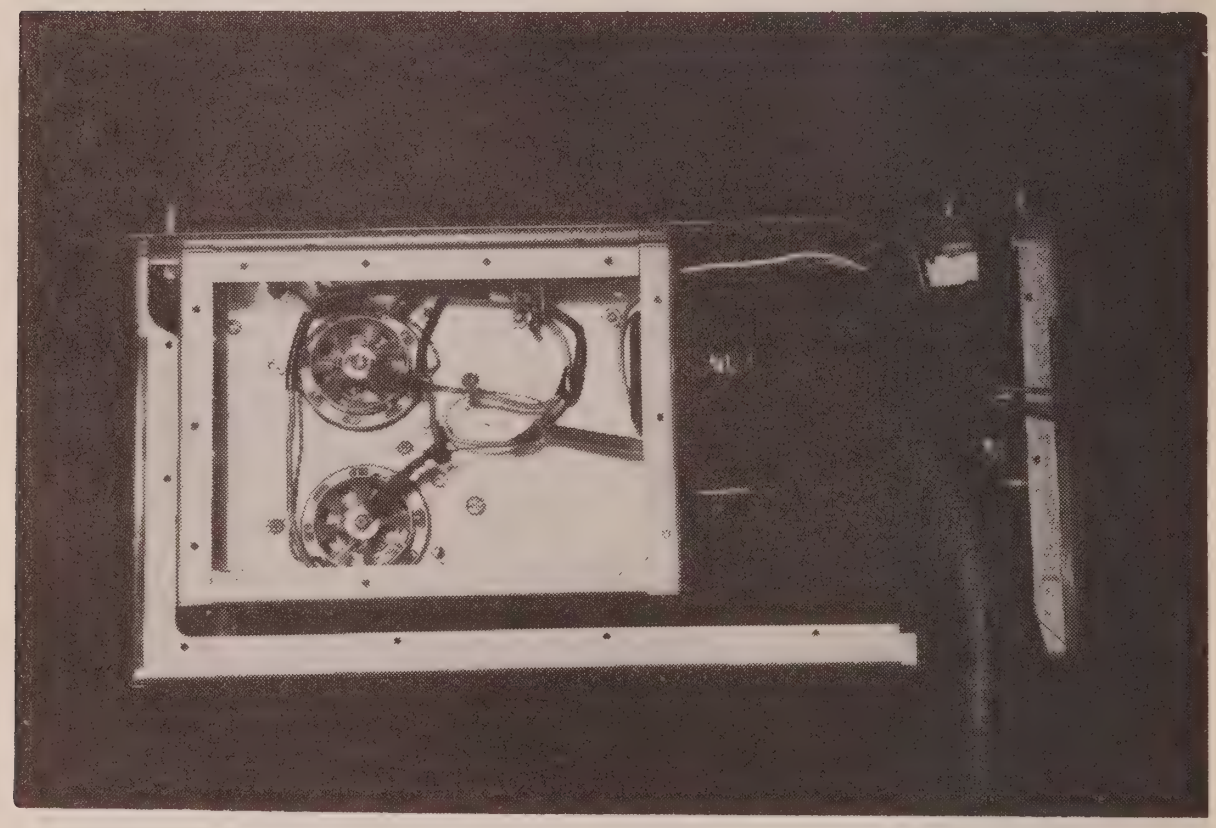

Fig. 3.24—Air tube leads in from the right. One turn grid primary and secondaries to right of tube sockets, are tied together with nylon cord. Two crossed grid wires pass through grommets in chassis to the right of the tubes for neutralization as explained in the text. Input tuning capacitor is just visible under chassis lip on top.

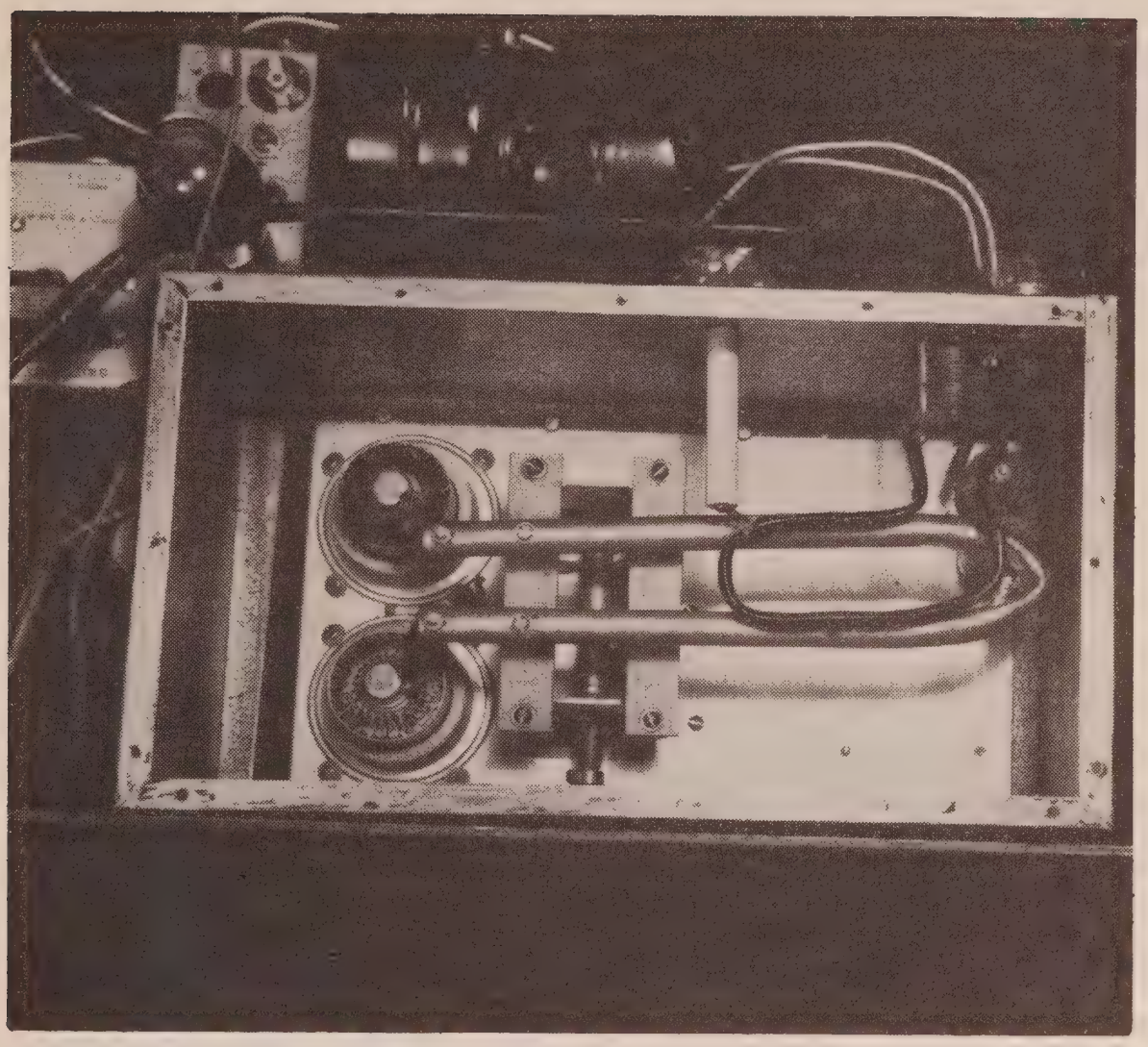

Fig. 3.25—Top view of a similar amplifier used as a 1 kw c.w. transmitter. The 2 amplifiers are similar electrically but have mechanical variations.

the shielding enclosures are well ventilated. Blower problems were discussed in the 50 mc amplifier section and apply equally well here.

The 4CX250B tubes should be cross-neutralized, at this frequency, with a pair of number 18 wire leads extending up through stand-offs or grommets into the plate circuit space. The wire leads about 1½ inches long above the chassis can be bent towards or away from the tubes until minimum d.c. grid current sudden variations take place when tuning the plate circuit through resonance and variations in plate circuit antenna loading. These amplifiers are both operated with about 100 volts of grid bias at 30 ma. The plate current on c.w. is 500 ma and around 250 ma with screen-grid modulation of the type shown in the chapter on modulation. Screen currents run anywhere from zero to 20 ma (at 2000 volts plate supply). Usually the antenna loading is increased until the screen current is well below 20 ma for the pair of tubes. Much higher values of screen current will flow with lower values of plate voltage.

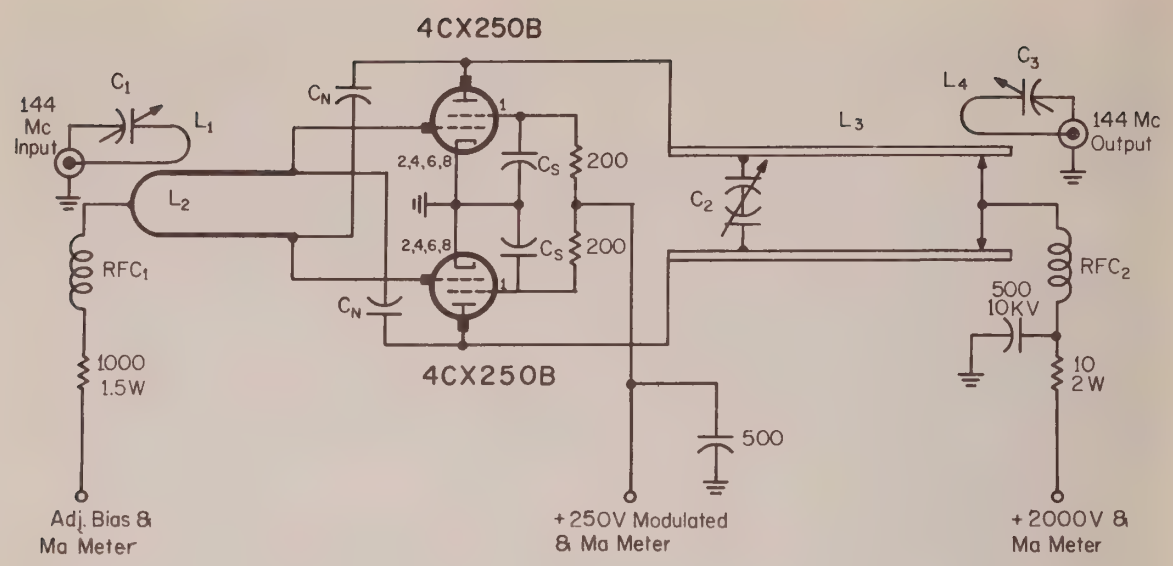

Fig. 3.26—Circuit of the push-pull 144 mc power amplifier.

C_1—35 mmf.
C_2—2-4 mmf (approximately) 0.2" gap.
C_3—15 mmf double spaced.
C_s—Screen bypass. Part of socket.
C_n—Crossed grid leads of #18 wire through chassis near tubes.
L_1—Input link, A 3" loop tied to L_2 as shown in photos.
L_2—10" length of copper strip 7/16" wide, from grid to grid.
L_3—Two 8" lengths of ½" dia. copper tubing spaced 1½" apart. L_3 connected to plates with ½" × 4" copper straps.
L_4—Output loop, #14E, approximately half the length of L_3. See fig. 3.25.
RFC_1—3" of #26E on ¼" polystyrene rod.
RFC_2—Ohmite Z-144.

3.3A 222 MC Exciter

The small transmitter or exciter shown in figs. 3.27 and 28 can be made to serve either purpose. As shown in fig. 3.29 it is an exciter for a 1 kw c.w. or 500 watt phone amplifier. By re-arranging the 832A screen grid circuit to connect through a variable 50K resistor to its plate supply, the plate and screen of the 832A can be modulated for a.m. phone operation. A 20 watt audio modulator would be suitable. An r.f. output of up to 15 watts can be obtained with an 832A, and up to 20 watts with a 6524, which is more efficient in the 200 mc region. The 6360 amplifier in this exciter is capable of putting out over 5 watts at 222 mc with a 250 volt supply and a 10 watt modulator. These are measured values of r.f. power output and are listed to show values which might be expected in other 220 mc transmitter designs.

This 222 mc exciter has an extra tube, a 6BH6 crystal oscillator which would be eliminated in most designs, since the first 6CL6 can serve as an oscillator-tripler. The extra tube operating from a regulated 150 volt supply was added in order to keep the transmitter within 5 kc of 222 mc at all times by using very low current through the crystal. Soon after the

photograph (fig. 3.27) was taken it was found that the heat from the tubes caused excessive crystal frequency drift, so the crystal was placed on the front side of a 15 × 6 × 2½ inch chassis. This removed it from inside the metal cabinet to the outside of the front panel (added later). These factors reduced the frequency drift to less than 1 kc at 222 mc when using an ordinary "surplus" crystal etched into the desired frequency. Further drift reduction or operation in extremes of room temperatures would require a better crystal and a crystal oven.

Type 6CL6 tubes were used for the first two tripler stages as shown in the circuit of fig. 3.29. A 6360 push-pull tripler and another 6360 amplifier follow this, all connected to a 250 volt plate supply. In order to obtain at least 15 watts of power output, an 832A stage is added. This is mounted with its socket above the chassis in a small perforated aluminum can. The plate "hair-pin" line extends from the split-stator tuning capacitor down towards the chassis, and the link, about 1 inch long, is actually under the tuning

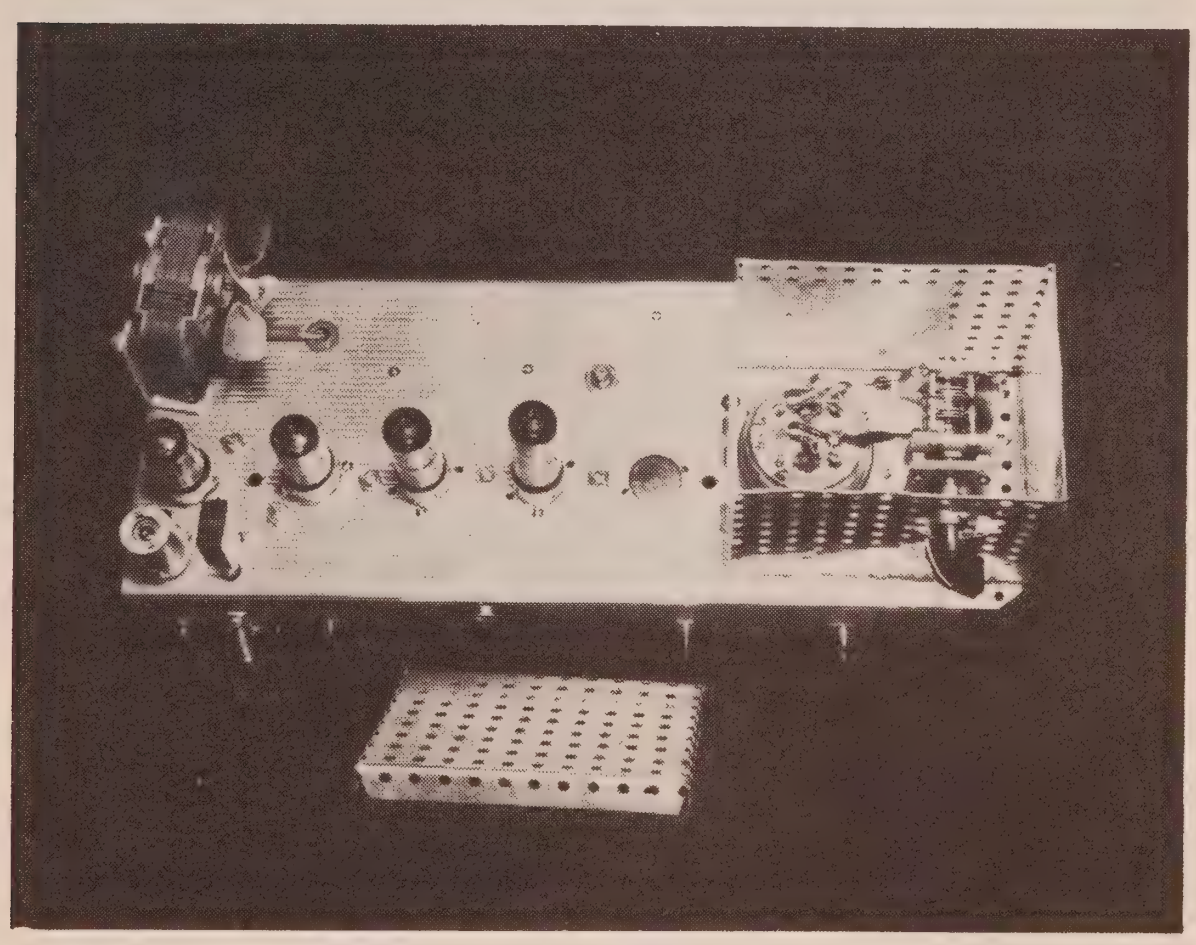

Fig. 3.27—Top view of a 222 mc exciter or transmitter. Twenty watts can be obtained with a 6524 and 15 with an 832A. A phonograph motor with a fan blade provides the cooling. The tubes are, from l to r; 6BH6 oscillator (shielded), 6CL6 tripler, 6CL6 tripler, 6360 tripler, 6360 amplifier and 832A amplifier in the cage. Control to the top right of the 6360 amplifier adjusts the bias on both 6360's but is not shown in circuit of fig. 3.29. Front panel controls are: 1st 6CL6 tripler cathode jack, ON-OFF switch and power plug. 2nd 6CL6 tripler cathode jack, 0-35 ma mater, meter switch, 832A screen control. Plate tuning for 832A is projecting from shield. Copper strap plate coil is to right of plate tuning capacitor in cage.

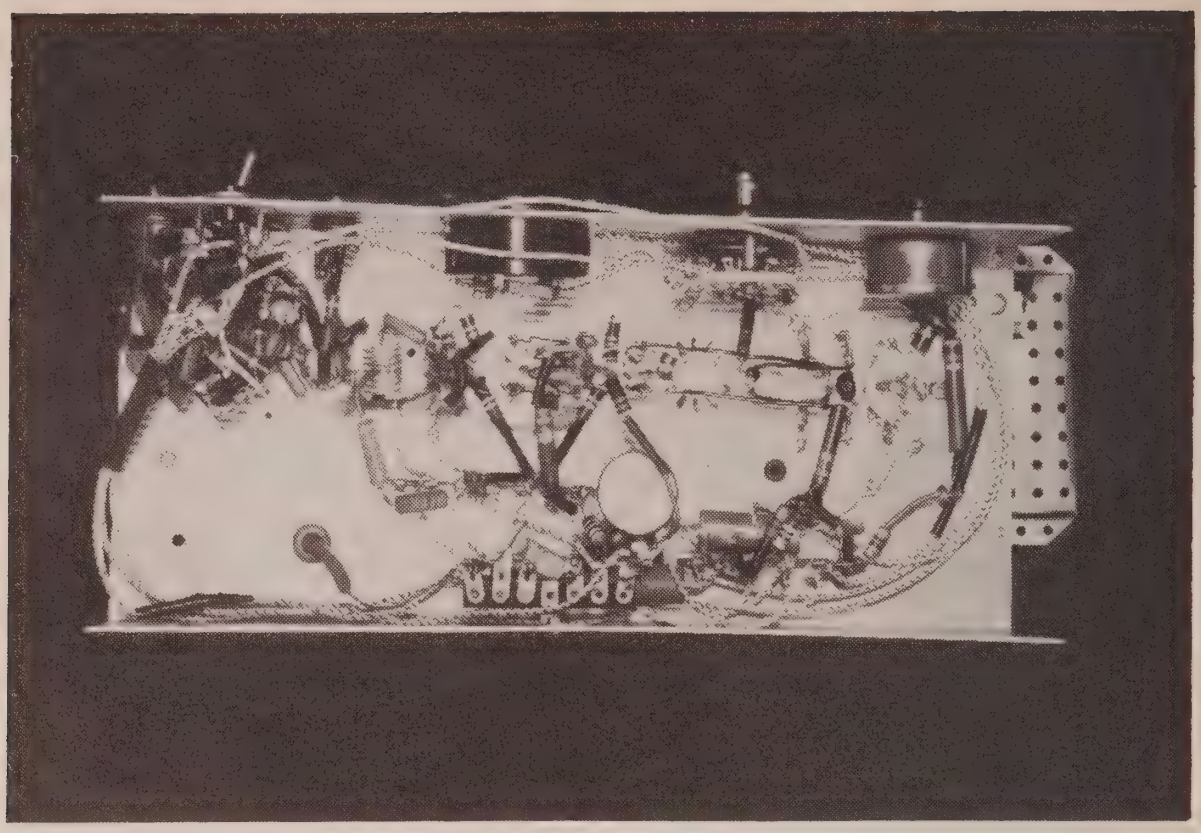

Fig. 3.28—Top panel components are, from l to r; 6CL6 cathode jack, power supply plug, second 6CL6 cathode jack, 0-35 ma meter, meter switch, 832A screen control. Below the meter switch are the hairpin inductors coupling the 6360 to the 832A.

capacitor. The shield can enclosure is added in order to prevent excessive radiation losses in the steel mounting case which surrounds the entire exciter. The plate line is made of a piece of ¾ inch wide sheet copper 5 inches long. The grid "hair-pin" line is made of number 17 wire to form a parallel line 1¾ inches long and spaced ¾ inch. The 6360 plate line also at 222 mc is a similar line about 3 inches long and spaced from the grid line a distance to produce 1 to 2 milliamperes of grid current in the 832A tube under operating conditions. The other circuit data is shown with fig. 3.29.

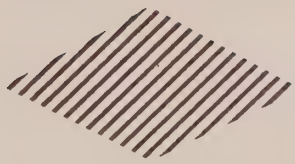

PARTS LIST FOR FIG. 3.29

L_1—17 uh r.f.c.
L_2, L_3—9t #22E, ⅜" long, ½" dia., iron slug.
L_4—7t #22E, ¾" long, ½" dia., center tapped.
L_5—3t #18E, ½" long, ½" dia., center tapped.
L_6—2t #18E, ¼" long, ½" dia., center tapped, in center of L_5.
L_7—Hairpin loop, #16E, 3" long, ⅝" wide, center tapped.
L_8—Hairpin loop, #16E, 2" long, ⅝" wide, center tapped.
L_9—Copper, 5" long, x ¾" wide formed into U, ¾" across.
L_{10}—Output link, hookup wire, one inch long placed near L_9.
RFC_1—6 turns of hookup wire
RFC_2—Ohmite Z-50.
RFC_3—Ohmite Z-235.

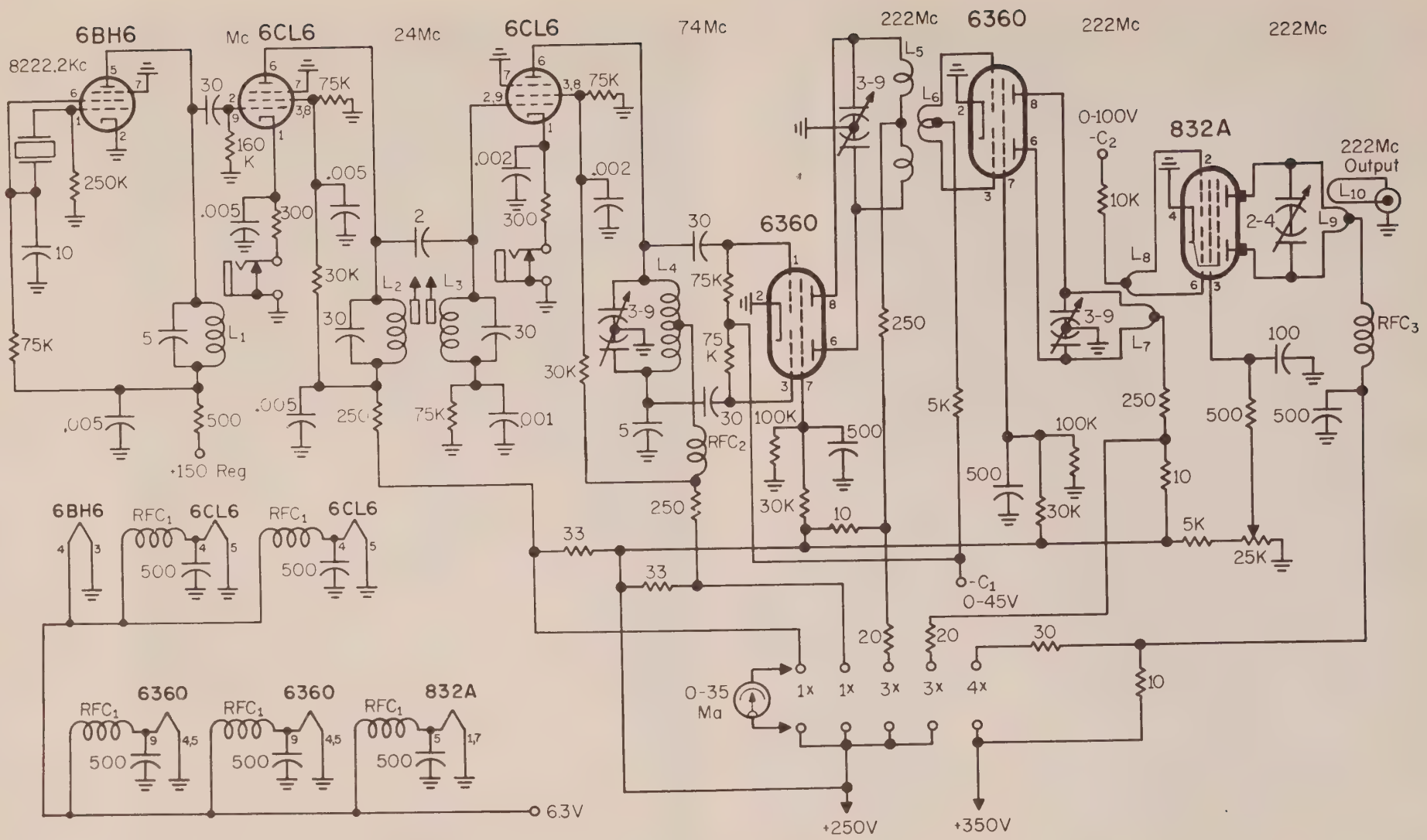

Fig. 3.29—Circuit of the 222 mc exciter or transmitter capable of 15 watts output with an 832A.

If a 6524 tube is used in place of the older type 832A tube, a 100 mmf screen bypass capacitor should be included, unless a built-in bypass capacitor type of tube socket is used. In making power output tests stability was improved. A small 10 to 50 or 100 mmf variable capacitor at this point from screen to cathode might provide a value for excellent stability and freedom from plate to grid circuit reaction. The 832A requires short pieces of hookup wire cross-connected from each grid over to the opposite side of the tube with about ½ inch of it near the glass envelope of the tube. Each amplifier seems to require individual treatment when using 832A tubes.

Type 6360 tubes can be neutralized very easily at 220 mc or 144 mc (when this is required) by soldering ⅜ inch pieces of hookup wire to each grid socket terminal and bending it forward towards the plate terminal on the same side of the socket.

Alignment procedure is similar to that described in the 144 mc units. Typical plate current values are as follows: both 6CL6 tubes 20 ma; first 6360 tube, 50 ma; second 6360 tube, 60 ma; and 832A tube, 80 to 90 ma. If the metering system shown fig. 3.29 is used, the readings may be different because of the internal resistance of the meter and the relative values of the 10, 20 and 30 ohm resistors. These resistors are grouped around the meter switch and by substitution and comparison to another meter in series with each plate return lead, accurate meter multipliers can be found. Usually the metering circuit is for the purpose of checking the relative plate currents of each stage so no great accuracy is needed. Resistors with 20% tolerance will serve for this purpose.

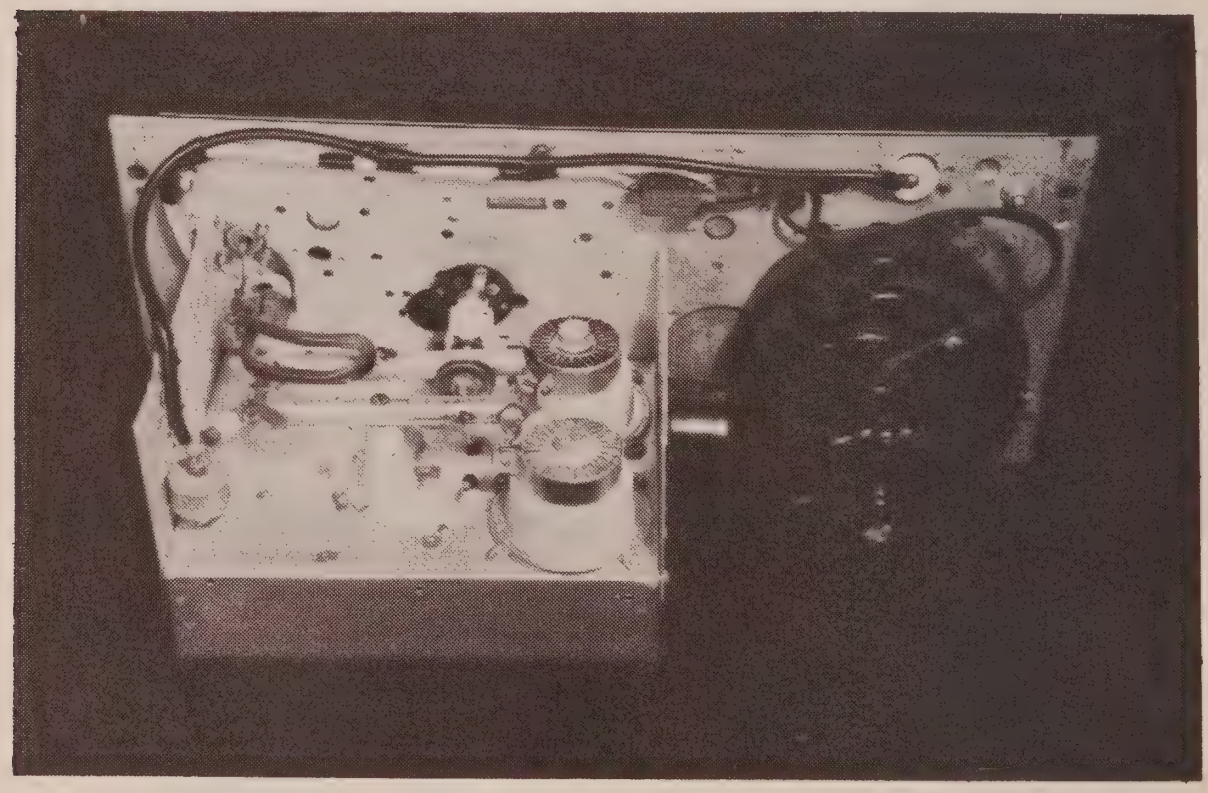

Fig. 3.30—Push-pull 4CX250B final can deliver a kilowatt on 222 mc. Parallel lines are supported by the standoff insulators. Modified neutralizing capacitor, C_2, is connected across the lines and tuned from the front panel. A large h.v. shaft coupler is used. The output link is on the left and the two neutralizing wires may be seen projecting through the chassis to the right of the standoffs.

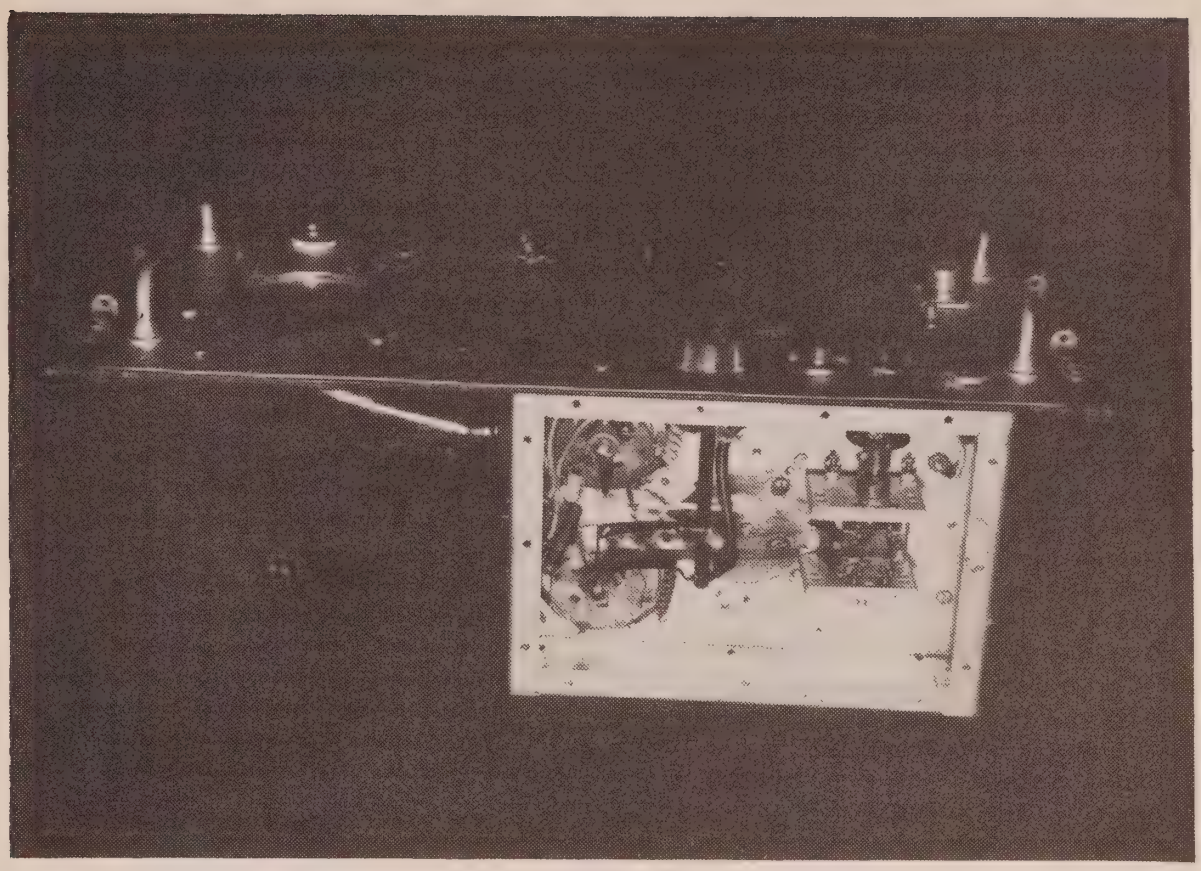

Fig. 3.31—Bottom view illustrates the variable coupling to the grid circuit. Grid tuning capacitor is on the right end of the chassis with the flat copper lines connecting to it.

An external negative 45 volts bias source is needed with this exciter for the two 6360 tubes. A potentiometer across this supply in r.f. chassis permits adjusting r.f. excitation current into the 832A grid circuit. Another potentiometer in the 832A screen grid supply controls the r.f. output power. The same 45 volt bias supply may be used for the 832A tube if desired.

3.3B High Power Amplifier

A Class C amplifier for power inputs up to 1 kw is shown in figs. 3.30 and 31. The sides and cover over the 4CX250B plate circuit was removed for the photographs. The amplifier is built on a 7 × 7 × 2 inch aluminum chassis with bottom cover. The air flows up through the tube sockets, chimneys and plate cooling fins. The amplifier started out as an experimental layout and test set-up, and as usual became a real work horse on the air in a long series of 222 mc DX tests. The input is 2000 volts at 500 ma on c.w. and 250 ma with screen grid modulation.

At this frequency the small plate cap clips over-heated and so r.f. plate lead connections were made by means of thin sheet metal clamps around the plate cooling fins. These connect to the parallel plate lines by means of short flexible copper ribbons or leads.

The plate line tuning capacitor has very little capacitive range since the rather small disks (one inch in diameter) were taken from an old neutralizing capacitor and threaded into the line before it was bent into a U shape. A pair of ceramic standoff insulators are the main supports for the

parallel lines. One of the disks is connected to a shaft and large knob on the front panel by means of a large h.v. shaft coupler, plus a flexible coupler to take up errors in alignment. Capacitor plates 1½″ in diameter would be more satisfactory since a better air gap would be possible, plus a greater tuning range.

Cross-neutralization by means of number 18 hookup wire leads is accomplished by extending these leads across to opposite tubes through rubber grommets in the chassis. About one inch of wire an inch from each tube gives enough capacity to neutralize the amplifier. These wires are soldered to the grid lines near the tube grid terminals. The voltage node in the grid circuit is beyond this point so the neutralizing capacities feed back out of phase voltage to the grids from opposite plates. The grid lines are a shortened half-wave type with a split stator tuning capacitor on the end opposite the grid terminals.

A more efficient grid circuit would lower the amount of grid driving power required. This would mean a larger chassis and longer and wider lines for lowering the line impedance. The circuit volt-ampere (or Q) ratio would be improved with less amperage in the grid circuit. The peak grid voltage required for Class C operation would then be obtained with less driving power.

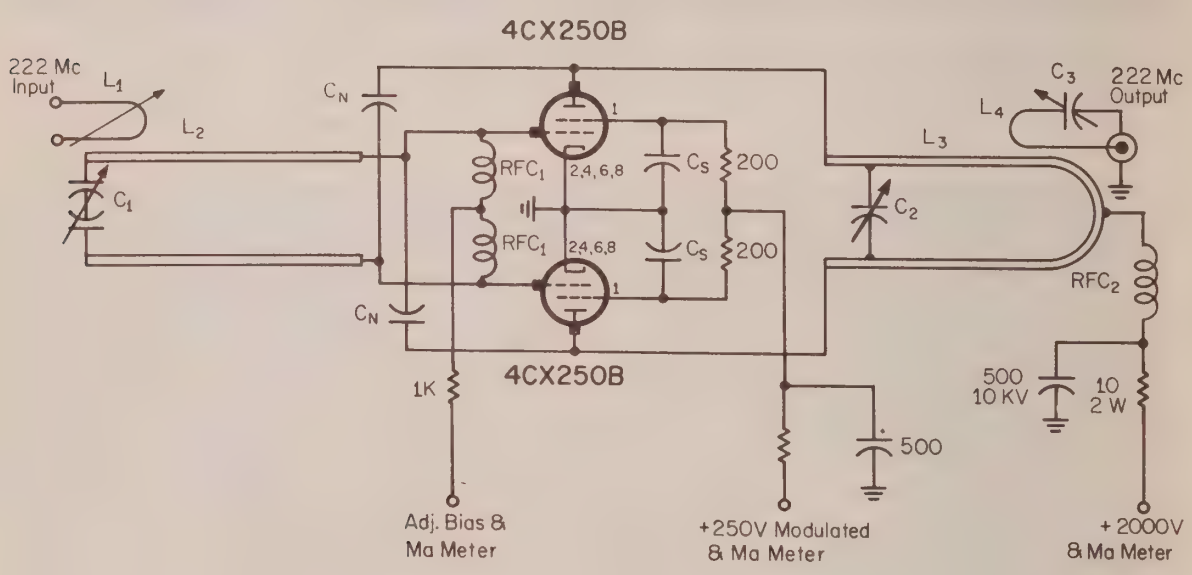

Fig. 3.32—Circuit of the kilowatt c.w. power amplifier.

C_1—3-20 mmf midget split stator.
C_2—disc type tuning capacitor 1″ diameter or more.
C_3—3-10 mmf double spaced.
C_n—Crossed grid wires of #18 up through chassis.
L_1—Input loop, adjustable (see fig. 31), 5″ length of #14E in rectangular loop.
L_2—Two 5″ long x ¼″ copper straps.
L_3—10″ length of ½″ dia. copper tubing bent into U shape, 1¼″ center to center.
L_4—Output loop, #10E, 1¾″ long, 1¼″ wide, ⅜″ above plate line.
RFC_1—15″ of #24C wound on 1W, 1 megohm resistors.
RFC_2—13″ of #22C wound on 1W, 1 megohm resistor.

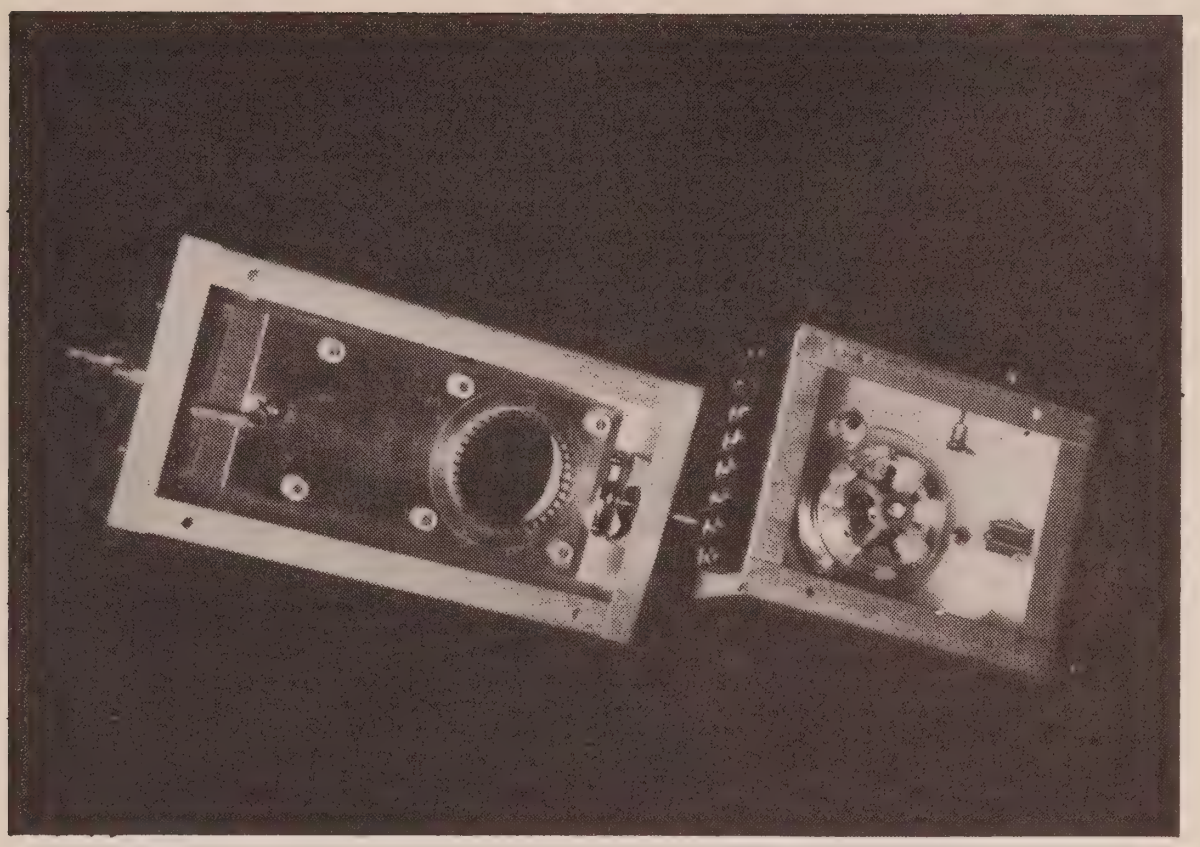

Fig. 3.33—A 220 mc amplifier designed by W6CDT. Using a 4X150A or 4CX250B, the plate circuit is a wide quarter wave line in a chassis on the left while the grid circuit (not wired) is on the right. Grid chassis is fastened to plate chassis so that plate connection is properly aligned.

The discussion of blower problems given in the 50 mc transmitter section applies to all high powered VHF units. The tube and circuit efficiencies decrease with increasing frequency so the problem becomes more acute.

3.3C Flat Plate Lines

The type of 220 mc amplifier illustrated in fig. 3.33, designed by W6CDT, provides an efficient plate circuit for a single 4X150A or 4CX250B tetrode. The plate circuit is a wide quarter wave line in the middle of a 4 × 8 × 2 inch chassis with heavy screen ventilated top sheet. The quarter wave line is at d.c. ground potential and the plate of the tube is bypassed to it by a large copper or brass plate on one side of the grounded plate. This plate is insulated by a larger piece of mica-mylar sheet insulation and insulating collars around each mounting screw. The tuning capacitor, a 3 plate midget, is connected to the grounded plate near the tube. The air gap should handle plate inputs of up to 200 watts or so with normal plate load coupled into the circuit near the grounded end.

The grid circuit (not wired in the photograph) may be designed for 220 mc or 110 mc if the stage is to be a power doubler. This grid circuit box, 4 × 4 × 2 inches, clamps over the plate circuit box in alignment with the plate

contactor ring. The two units were pulled apart for the photograph in fig. 3.33.

Modifications of this nice design were used by the author in some of the 432 and 1296 mc equipment described in this chapter.

3.4A 2C39 Type 432 MC Transmitter

The exciter for the average 432 mc transmitter usually is a 144 mc transmitter of 5 to 15 watts output. The drive from this is used on a power tripler which then drives a final amplifier. A few types of transmitter tubes will function effectively in the 432 mc band. The type 2C39 and its later versions will work very well as grounded grid triplers and amplifiers, especially if driven hard by the 144 mc transmitter or exciter. The main problem is in modulating grounded grid r.f. amplifiers. If amplitude modulation is desired, both tripler and amplifier must be plate modulated in order to have a high level of carrier modulation. Another solution is to frequency or phase modulate the transmitter. This is not at all difficult with simple circuits in the exciter but does require an f.m. detection system somewhat better than slope detection sometimes used in communication receivers. A good f.m. detection system will function very well on weak signals and is about as effective as a.m. systems when transmitter and receivers are set up for optimum bandwidths for the frequency deviation in use. At 432 and 1296 mc this deviation optimum is probably between 5 and 15 kc from various tests made by amateurs on very weak signals in noisy locations.

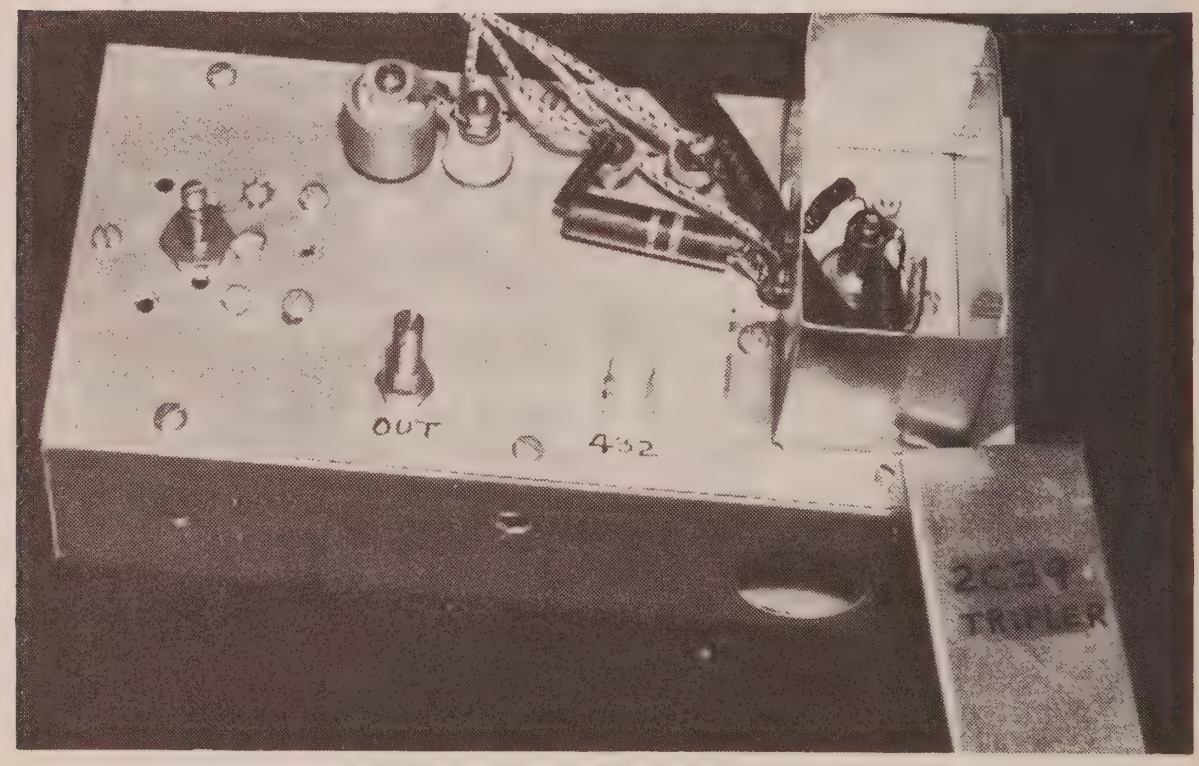

Fig. 3.34—A 144 to 432 mc tripler employing a 2C39B. It has an output of 4 watts with an input of 20 and is adequate to drive a 4X150A or 2C39B. The high voltage input is in the rear center, bypassed by a 100 mmf capacitor. Resistor R_1 is connected to a button bypass. The input circuit is housed in the cage.

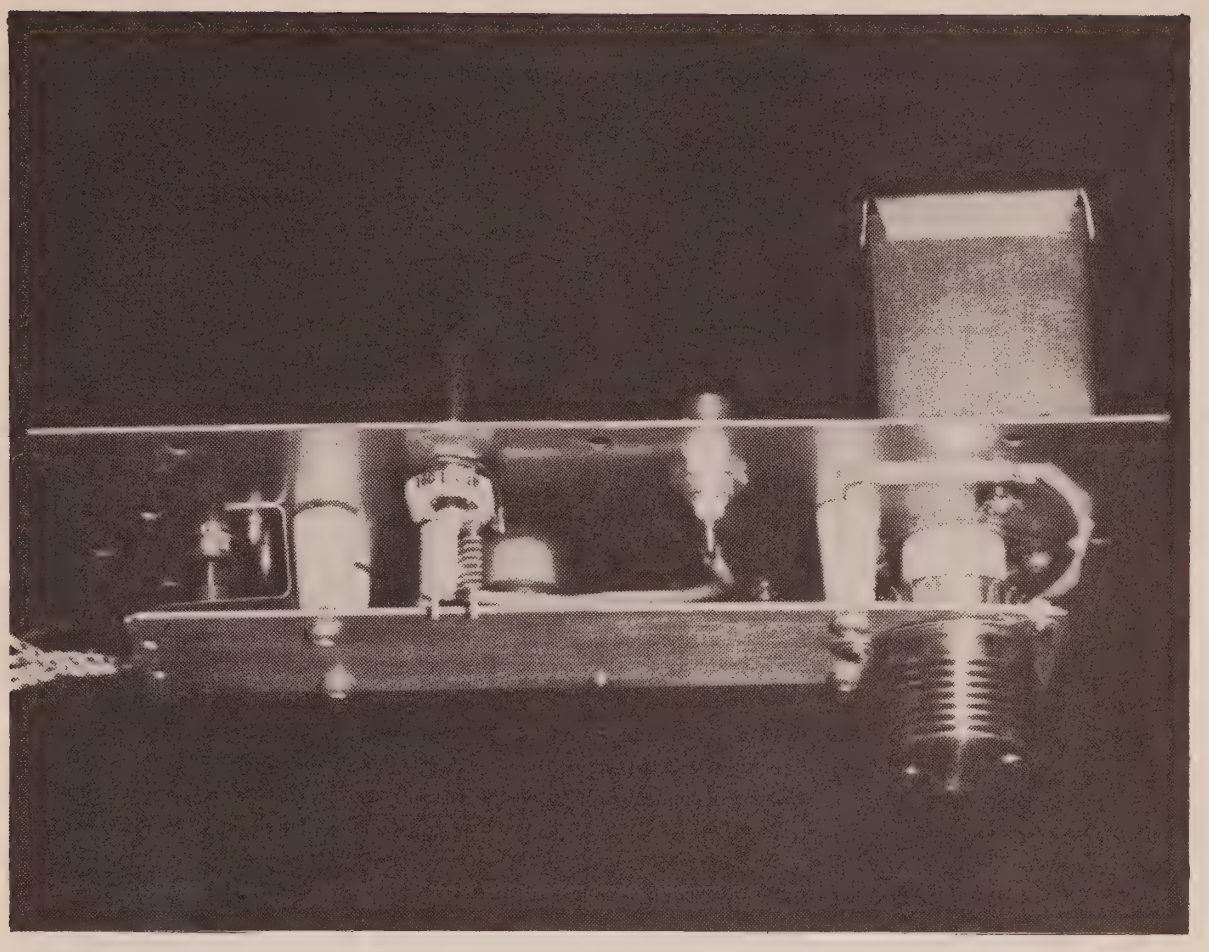

Fig. 3.35—Construction of C_2 may be seen on the left end of the plate line. Output loop, tuning capacitor and connector are visible in the center. Not visible, behind the plate line, is the *r.f.c.*$_2$ connected to the center screw on the plate line.

The 2C39B tripler shown in fig. 3.34 and 35 has a "measured" output of 4 watts with 20 watts input. The error in r.f. power measurement at this frequency is not known but is probably on the low side by quite a large factor. The s.w.r. device is useful mainly for comparing r.f. power output. The actual power output is sufficient to drive either a 4X150A or 2C39B amplifier effectively with full legal input of 50 watts to the amplifier stage. The 2C39 amplifier in the photographs, figs. 3.36 and 37, is exactly like the tripler in its flat plate line construction, so both units will be described as one. In fact, the two units are alike in all respects except grid leak and cathode driving circuit values. The circuits look alike and one diagram serves for both, fig. 3.38. The differences are listed in the circuit diagram values.

For comparison, the 2C39 amplifier gave an output of 10 watts with 25 watts input. These measurements were made with a 400 volt supply. Normally these tubes are used with 600 volts when plate modulated, or higher values for f.m. service. The input was limited by the low value of plate voltage in these tests, but give an idea of what might be expected with higher plate supplies. The output should be around 20 watts with 50 input. The tripler has a power "gain" of about ½ and the amplifier a gain of 2 to 3 at these frequencies based on these approximate values.

The 432 mc plate line for both units consists of a wide flat line 1½ inches wide and 6⅞ inches long. The length was limited by the length of the 8 × 4 × 2 inch chassis used as the cavity. This line has a 1¼ inch hole near one

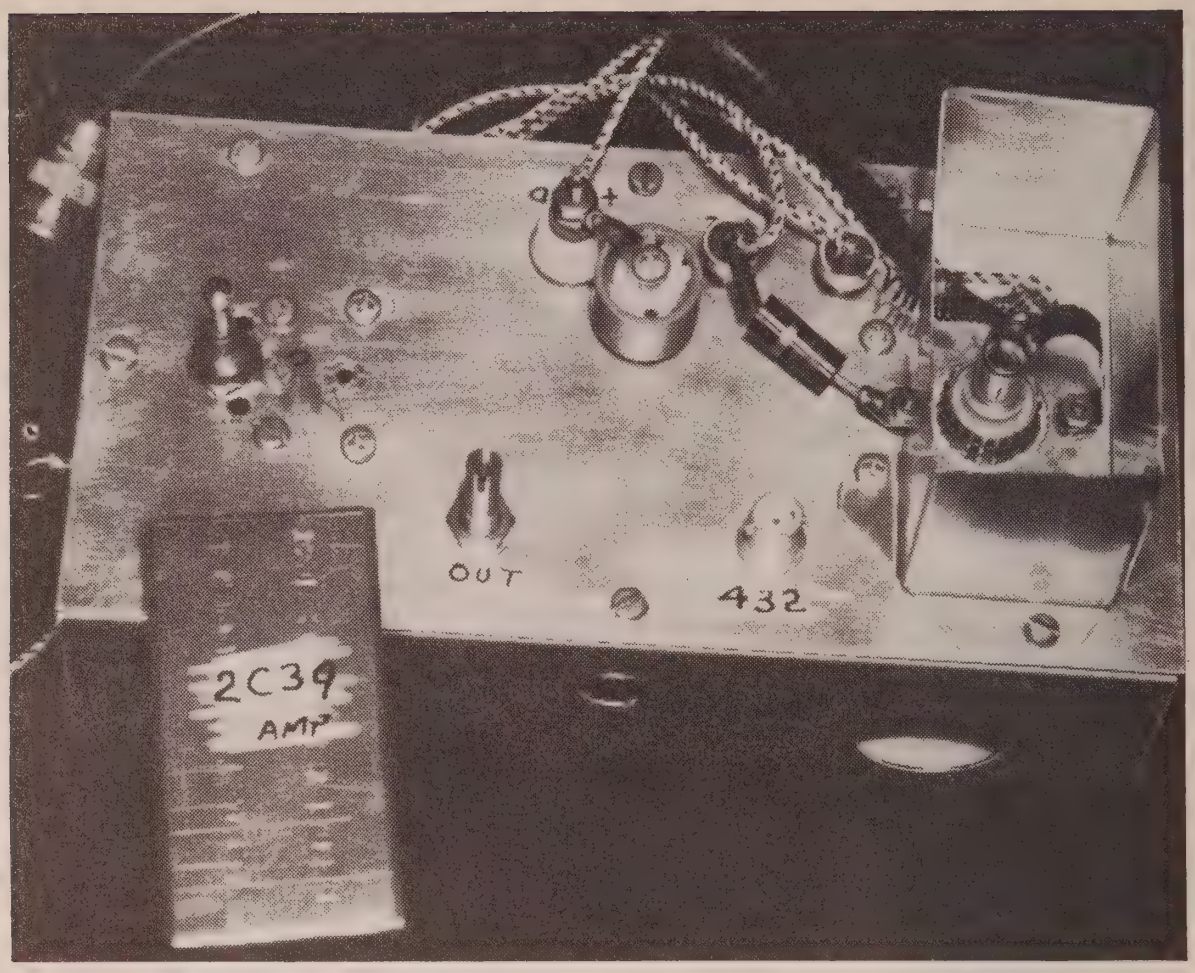

Fig. 3.36—Top view of the 2C39B, 432 mc amplifier. Only the input circuit in cage is different from 3.34. Inductor L_1 is a copper strap described in the text.

end into which the plate contactor ring is fastened with machine screws. If this ring is to be soldered in place, the flat plate line should be made of brass. The grid contactor and its mounting plate is mounted on the 4 × 8 inch aluminum plate (cover for the 4 × 8 × 2 inch chassis). The grid mounting plate approximately 2 inches square is insulated from the large ground plate with a piece of .01 inch sheet teflon and the plates fastened together with small machine screws and bakelite insulating collars. The clearance hole in the ground plate should be 1 inch in diameter. The cathode connection is made with a slotted piece of thin walled brass tubing. The inside heater lead connection to the heater r.f. choke is made of a similar piece of smaller brass tubing. The 432 mc radio frequency chokes are made by winding 7 inches of number 24 enameled wire on a ⅛ inch drill as a form, then slipping it off to make a self supporting coil. The 144 mc choke for the tripler heater have a little more inductance with 12 inches of wire in the coil.

The cathode coil for the tripler consists of 8 turns of number 20 enameled ¼ inch in diameter and ½ inch long. The cathode coil for the amplifier consists of a 2 inch piece of ¼ inch wide copper strip, bolted to the ground plate and soldered to the cathode clamp (fig. 3.36). These inductances resonate with the input capacity of the tube. The coaxial line in both units connects directly to the cathode. A small shield box was built around the cathode circuits to reduce losses by radiation and protect the tube. These boxes are 1½ inches wide, 3 inches long and 1¾ inches deep.

A small blower with 1 inch hose outlet is used to blow across the tube plate fins for cooling. A 1 inch hole on each side of the chassis box is used for air intake and outlet.

The plate line is mounted on four ¾ inch ceramic standoff insulators, figs. 3.35 and 37. This puts the line closer to one ground plane than the other but gives better clearance over the plate cooling fins in a 2 inch box depth. The variable tuning capacitor consists of a bent piece of springy sheet brass under the plate line at the end away from the tube. A 6-32 machine screw in an old slug coil bearing has a short bakelite insulator screwed on one end which pushes against the springy brass plate. This varies the air gap and the capacity. The r.f. output was increased 10% when this capacitor was substituted for the regular miniature variable type. This capacity was a little low for the desired air-gap, so a heavy metal plate, bent as indicated in fig. 3.38, was bolted to the inside of the box. This forms another capacitor plate with about ⅛ inch gap to the plate line.

The tripler requires about 10 watts of cathode drive. The grid current in the tripler should be about 10 ma. If more drive is available, the tripler grid

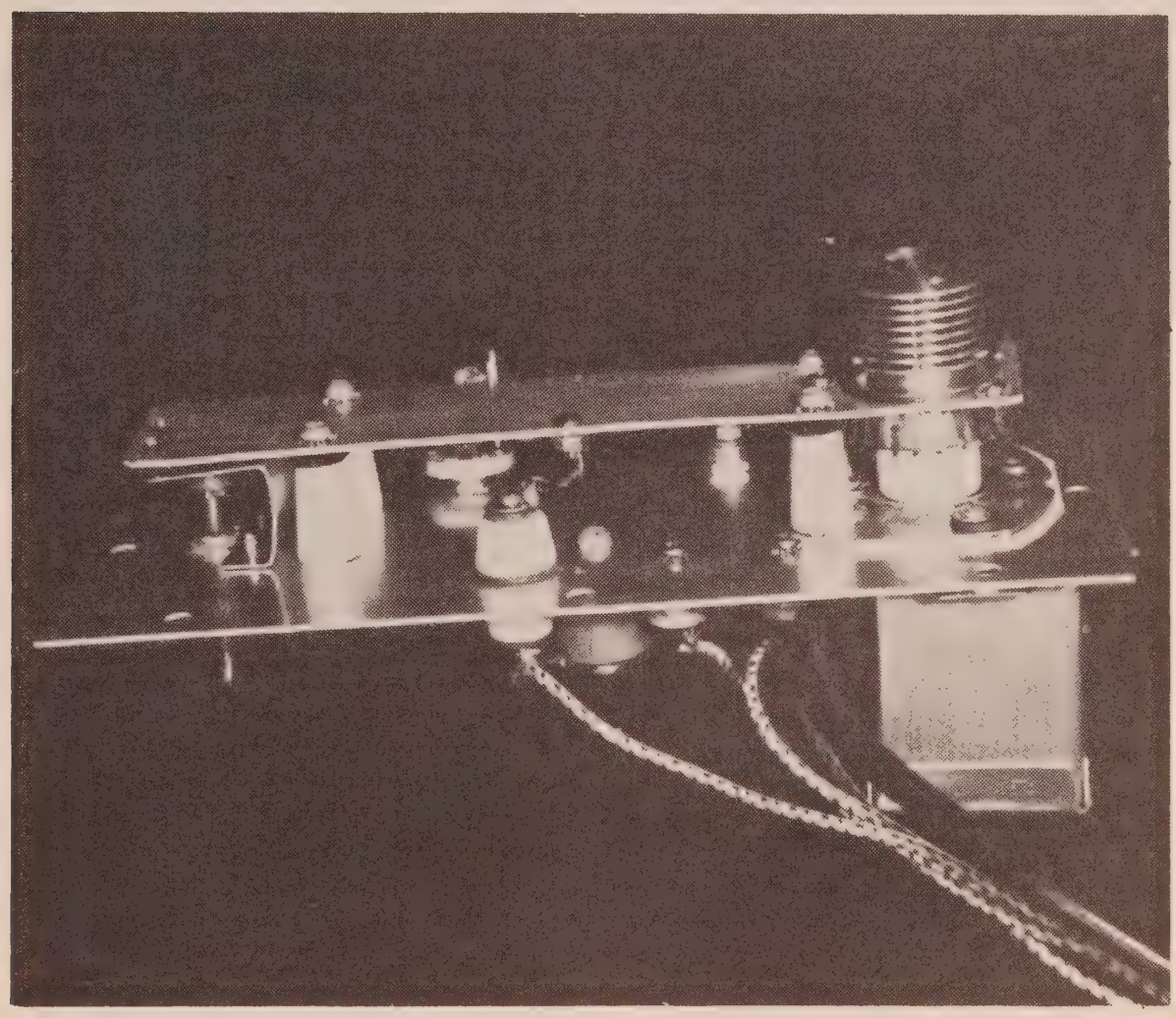

Fig. 3.37—Side view of amplifier. Observe *r.f.c.*$_2$ connected from the feed through to the plate line. Capacitor C_2 is on the left end of the plate line.

leak can be increased in value and the tube will operate more efficiently. The amplifier grid current should be at least 25 ma. The plate current of each tube will be from 60 to 80 ma at moderate plate voltages. The tubes are rated up to 600 volts d.c. for plate modulation. Both stages should be plate modulated, which means a 50 watt modulator is needed. If f.m. is used, 800 volts or more is suitable, though for 50 watts input there is little to be gained by using more than 750 volts. Grounded grid r.f. stages operate at a little higher gain with higher plate voltage which may be a factor if the 144 mc drive is a little low. These tubes are made to operate with large values of grid current. The values listed are about the minimum for good r.f. output.

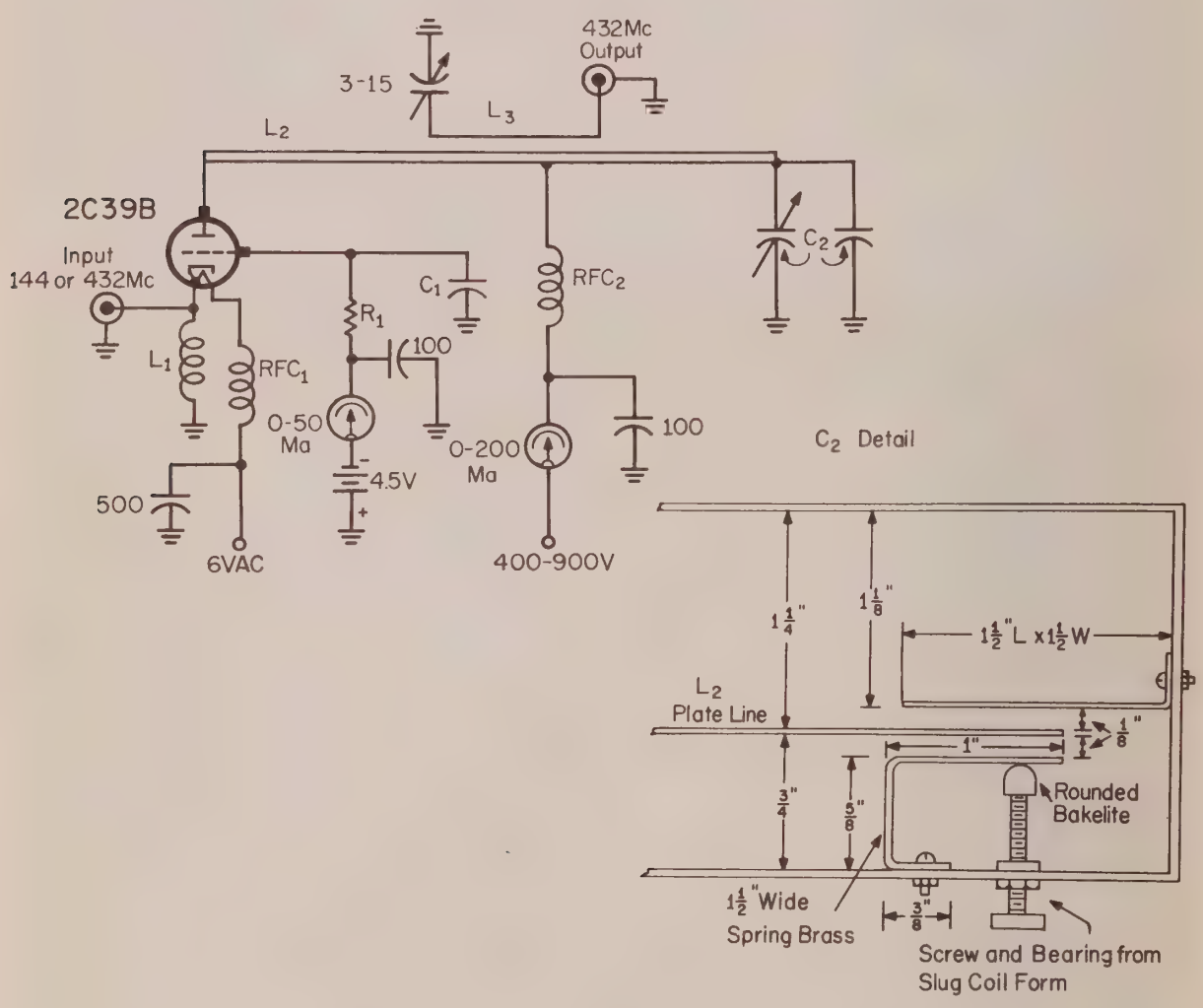

Fig. 3.38—A 432 mc circuit for tripler or amplifier service. Component value differences are shown in the chart.

For tripler service (144 mc input)
L_1—8t #20E, ½" long, ¼" diam.
RFC_1—12" #24E, ⅛" dia. coiled.
R_1—10,000 ohms approx.
For Amplifier service (432 mc input)
L_1—2" length of copper strap, ¼" wide.
RFC_1—7" #24E, ⅛" dia. coiled.
R_1—550 ohms.
Plate Circuit Components (432 mc)
C_1—Formed by the grid mounting plate insulated from ground by .01 Teflon as explained in the text.
C_2—See detail above.
L_2—Plate line 1½" × 6⅞" long, raised ¾" from ground in a 4" × 8" × 2" chassis (see fig. 3.35).
L_3—Output loop, hookup wire, 4½" long.
RFC_2—Ohmite Z 432.

3.4B Coaxial Line Transmitter

A tripler and amplifier with 4X150A tubes has been popular for a long time. The transmitter shown in figs. 3.39 and 40 is one that has seen a lot of use on 432 mc. The quarter wave large coaxial lines fit over the 4X150A tubes with the inner conductor of 1¾ inch diameter (o.d.) and the outer pipe 4 inches in diameter. Finger stock soldered to the inner line contacts the plate and a Z460 Ohmite r.f. choke connects to the plate by contacting the cooling fins. The inner line, including finger stock, is about 2¾ inches long and the outer line about 4¼ inches long. The preferred method of construction is the type shown for the amplifier in the right hand coaxial line, fig. 3.39. The inner line also has a flat round flange, smaller than the end top plate on outside line. It is insulated from the grounded shell or end plate with two pieces of .005 inch teflon and held in place with machine screws and insulating collars. This construction forms a low impedance bypass capacitor, C_1, for the r.f. currents and blocks the high voltage. The tripler line in fig. 3.39 is at high d.c. potential and is not recommended. Both units

Fig. 3.39—A coaxial tripler (1) and amplifier (r), for 432 mc. The tripler coaxial line is hot with the full 600 volts and this construction form is not recommended as explained in the text. The 432 mc output connector is on the top right of the amplifier coaxial line. Lead emerging from inner line of the amplifier coax is connected to $r.f.c._2$ and runs to the modulator. Tripler output loop may be seen on the right of the tripler tank.

should be like the amplifier line. A link about ¾ inch on a side near the shorted end couples r.f. out from the cavity. Tuning is done with a round disk in the cavity near the plate of the tube. These disks, about 1 inch in diameter, are fitted on a ¼ inch diameter machine screw and shaft coupler for adjustment on the front panel.

The grid circuits are enclosed and air is forced up through the tube sockets and plate cooling fins. No tube chimney is needed in this construction since the air has to go out through the plate fins. The 144 mc grid circuit consists of a copper strip $^5/_{16}$ inch wide and about 5 inches long from grid capacitor mounted on the grid terminal, to ground. This U shaped circuit is tied to the series tuned coaxial link. The 432 mc grid circuit was made of a similar piece of copper about 2 inches long and series tuned with a 3 to 15 mmf capacitor. The coaxial input line is tapped on this strap circuit near its connection to the grid blocking capacitor. The exact point is determined experimentally for best grid drive.

With a 600 volt plate supply and 250 screen supply, the tripler plate current is 150 to 175 ma and the amplifier 85 ma. The tripler grid current is 7 ma and the amplifier from 10 to 12 ma. The 4X150A is difficult to modulate, that is, to get the correct ratio of audio power into the plate and

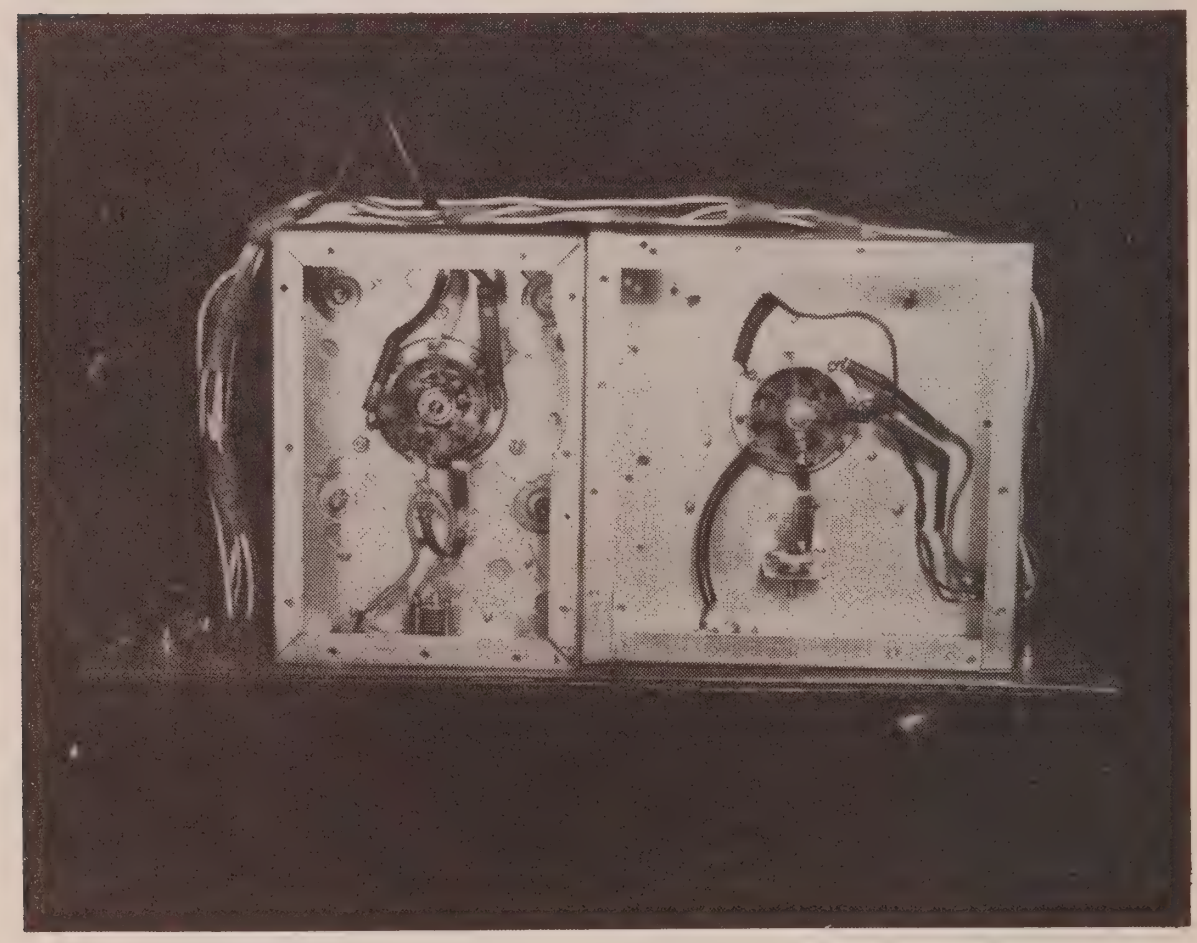

Fig. 3.40—Input circuit (144 mc) is in the bottom of the left chassis. Primary and secondary are tied together with nylon cord. Grid loop is flat copper line. Input to the amplifier is through the front panel via coaxial line. Note the smaller *L-C* components for 432 mc on the right.

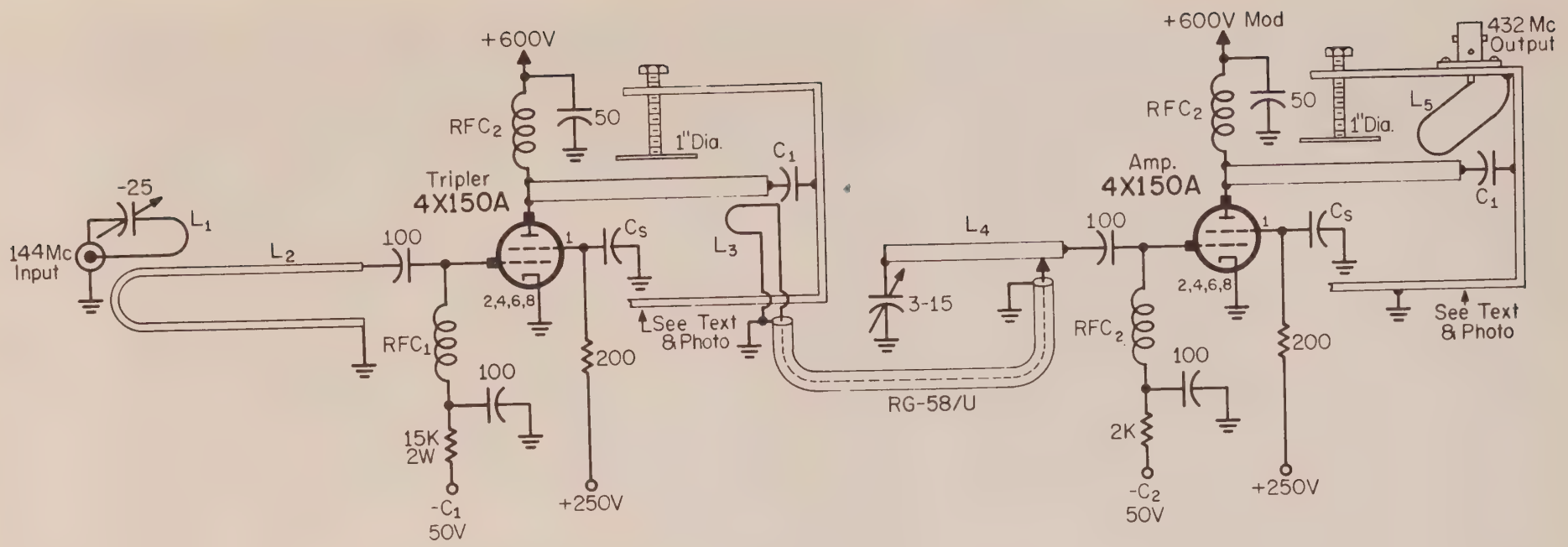

Fig. 3.41—Circuit of a coaxial tripler and amplifier for 432 mc.

C_1—Bypass inside of mounting plate on inner coaxial line. See text for details.
L_1—5" length of hookup wire.
L_2—Copper strip 5/16" wide, 5" long.
L_3—3/4" dia. loop of hookup wire on one side of tank.
L_4—Copper strip 5/16" wide, 2" long.
L_5—3/4" dia. loop of hookup wire on one side of tank.
RFC_1—Ohmite Z-144.
RFC_2—Ohmite Z-460 r.f.c. in plate circuits are located inside of inner line.

screen grid circuits. The d.c. screen current depends so much on antenna loading in the plate circuit that it is difficult to get the right amount of audio power into the screen grid. A tapped winding for the screen grid, on the modulation transformer, is very desirable but not often available. Figure 3.41 shows the circuit diagram of this transmitter. It can be driven by a 6360 or 832A buffer stage on 144 mc provided this stage has around 10 watts of output.

3.4C Flat Plate Line Transmitter

The photographs in figs. 3.42 and 43 illustrate a more economical and easy to build type of 432 mc transmitter with 4X150A or 4CX250B tubes. Half wave plate lines for a tripler and an amplifier are each mounted on six 1½ inch stand-off insulators in an aluminum chassis. The latter can be 8 × 12 × 3 inches or 10 × 12 × 3 inches with ventilated covers and a center shield partition separating the two plate circuits. (See fig. 3.43). The plate lines are tuned with spring brass plate capacitors visible in fig. 3.42 of a partially completed amplifier. These variable capacitors are tuned by pressure on one side, using a machine screw, an old slug coil tuning screw bearing and an insulator between the grounded screw and the grounded

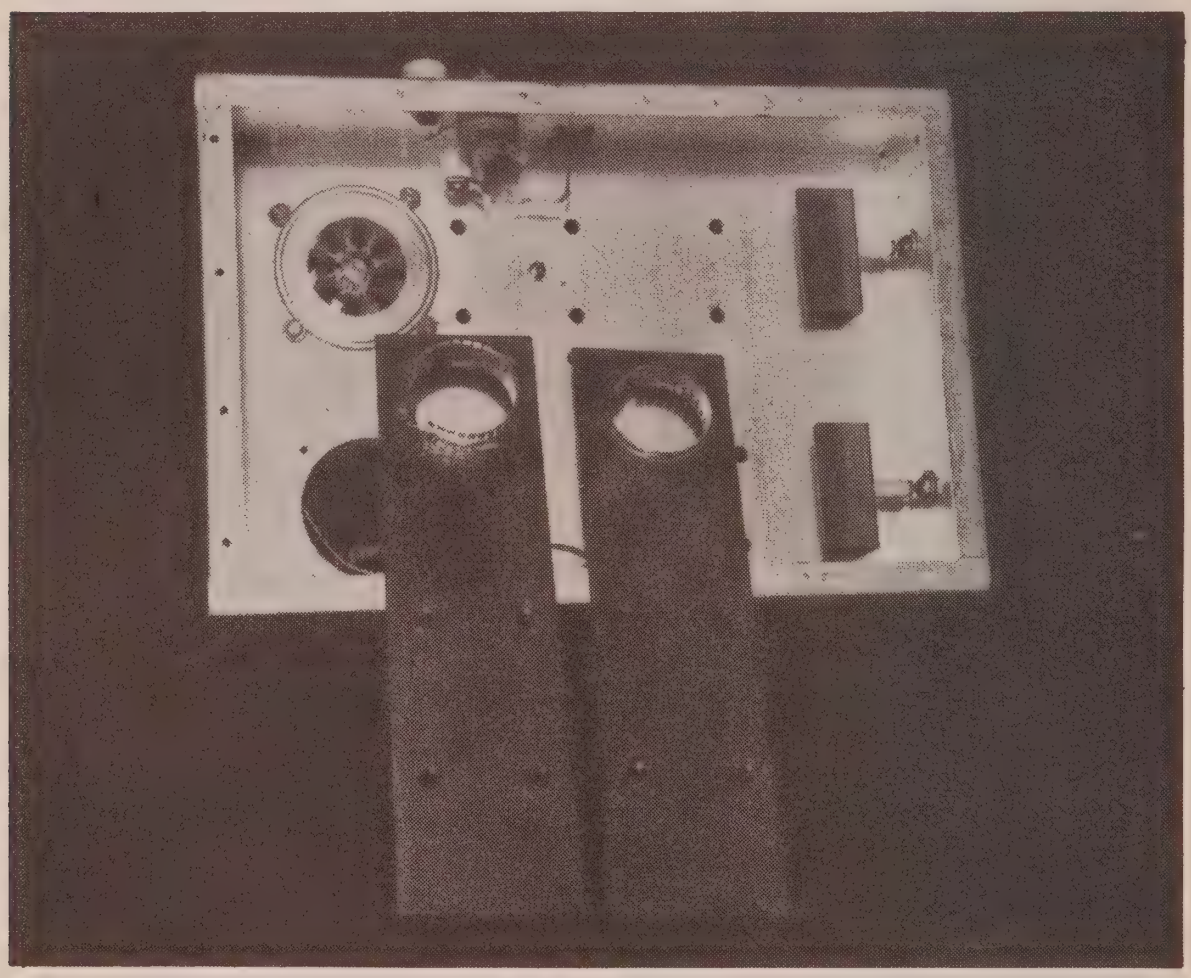

Fig. 3.42—Partially completed view of a flat plate line 432 mc amplifier and tripler. The spring brass capacitors are on the left and the tripler section is the top unit. Output coupling line, one of two methods tried, is shown on front lip of chassis, between output connector and ground.

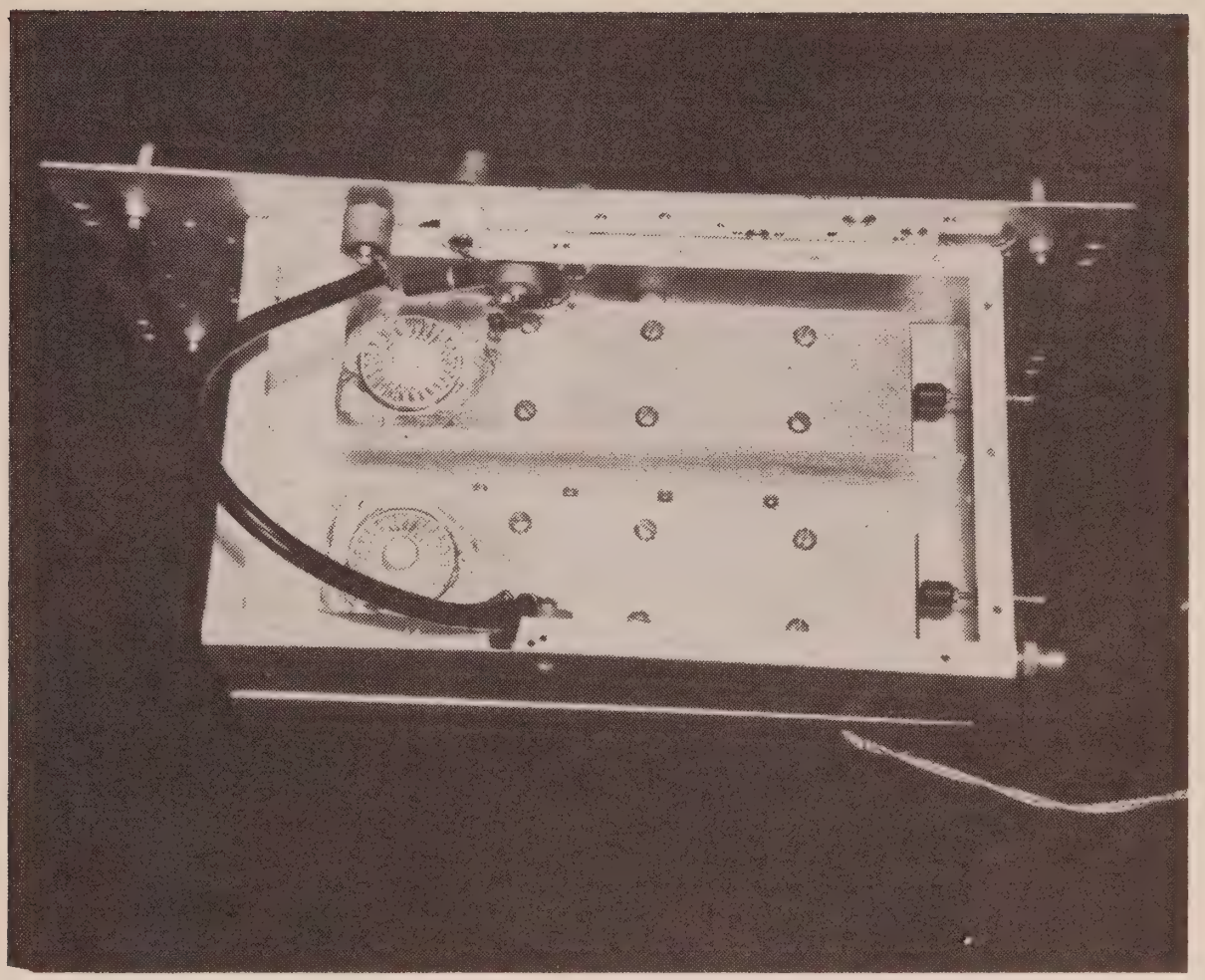

Fig. 3.43—Assembled view of 432 mc tripler and amplifier. Tripler output connector is visible in the lower right. The 10 ohm 2 watt resistor in plate circuit of the tripler may be seen mounted between the 50 mmf barrel capacitors and the h.v. feedthrough on the front panel. Below the feedthrough are the 2 r.f. chokes in the plate circuit of the amplifier.

spring plate. Porcelain insulators in fig. 3.42 were discarded for short bakelite rods, fig. 3.43, because of the grinding noise of porcelain against brass. A rounded piece of bakelite has a nice smooth action. The plate lines of number 18 sheet brass (or heavier) are 9¼ inches long and 2½ inches wide. High voltage connection, through a 432 mc r.f.c., is made at one of the standoff insulator screws near the tube. A piece of finger stock spring is soldered in a hole in the plate lines to make contact with the tube plates. The tubes are 1.65 inches in diameter. Ceramic chimneys are used between the air cooled sockets and the tube plates in order to have the air flow up through the plate cooling fins.

Another aluminum chassis 8 × 12 × 3 inches in size is fastened to the plate cavity chassis. The lid for this chassis should not be ventilated. Air flow through the hole in the rear (fig. 3.44) from the blower must be confined to flow up through the tube sockets. The 144 mc circuit, figs. 3.44 and 45, is made of a strip of sheet copper 5 inches long and ¼ inch wide. It is self resonant at 144 mc with the input capacity of a 4CX250B tube. A 4X150A has a little lower input capacity so this strap should be longer, perhaps 5½ or 6 inches. A piece of coaxial line is tapped one inch above the grounded

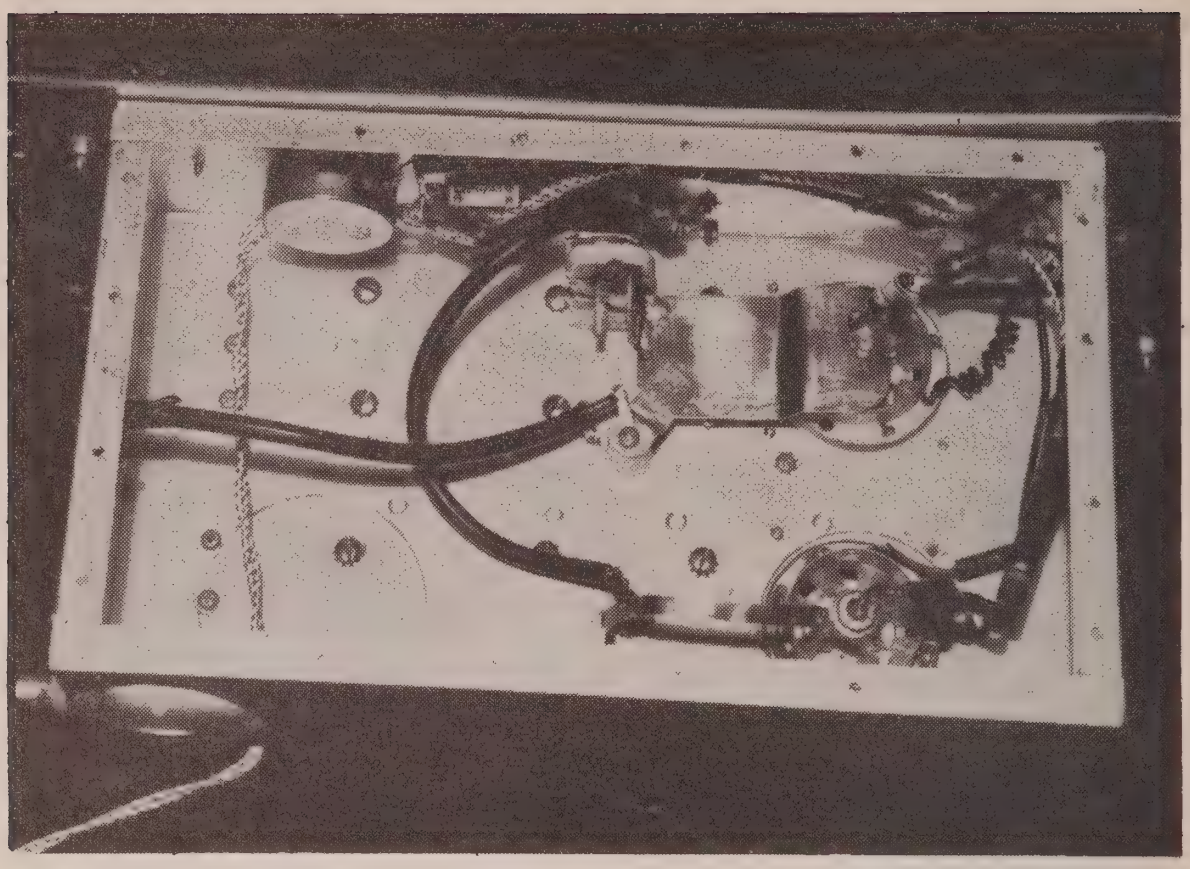

Fig. 3.44—Bottom view showing grid lines. In foreground is the 144 mc input inductor, tapped 1 inch up from ground, fed by RG58U from the front panel. Amplifier input circuit inductance is the 2" × 4" copper plate mounted between the grid terminal and the 3-10 mmf. The input line is capacitive coupled to the grid through the copper finger mounted over the line.

end of this 144 mc circuit for connection to a front panel coaxial fitting. The 432 mc amplifier grid circuit is another wide plate line bent up and over the tube socket flange. (See fig. 3.44). A small tuning capacitor tunes this half wave line to 432 mc. It is a piece of sheet copper 4 inches long and 2 inches wide, supported by the tube socket grid terminal and by the stator of the end tuning capacitor. Enough grid drive is available so the losses in this type of tuning capacitor are not important. Coupling from the coaxial line is capacitive. This capacitor is a piece of sheet copper ½ × 1¼ inches in size, spaced 1/16 inch above the end of the grid line. It is mounted on a ½ inch stand-off, so requires a downward bend in order to be close to the grid line which is only ¼ inch above the chassis.

Two methods of output coupling were tested in this amplifier. One is to use a strip of copper ¼ inch wide and about 3 inches long from a coaxial jack to ground or to a series capacitor of about 1 mmf. The other system is to tap the coaxial line directly on the grounded spring brass tuning capacitor plate. The tap should be up about 1 inch from the grounded end and can be at one edge of this spring plate. RG58U or similar line is flexible enough for this purpose since the plate "travel" is less than ½ inch at the point of connection for full tuning range of these capacitors. These capacitors are made of thin springy brass 2 inches wide and 2½ inches long overall. The brass is bent to have a top lip 1 × 2 inches in size and a lower lip for chassis mounting

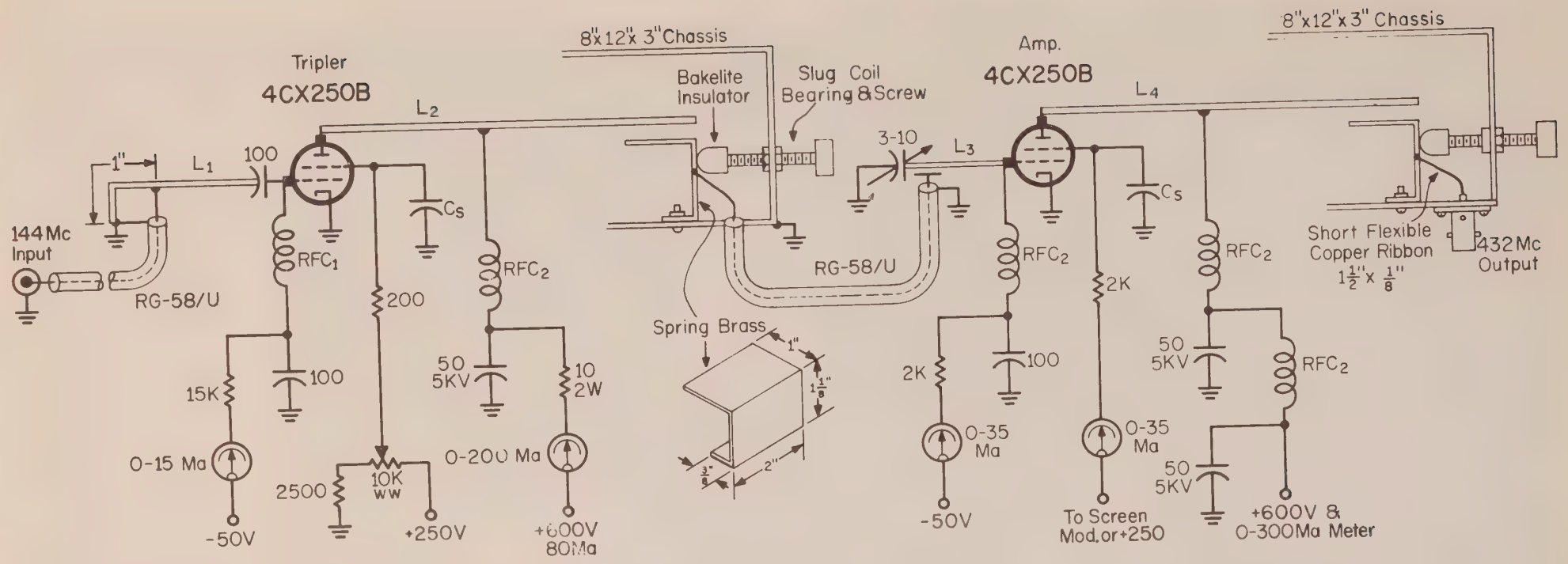

Fig. 3.45—Circuit of the flat plate line 432 mc transmitter. The output coupling used is the alternate method from that shown in fig. 3.42 as explained in the text.

C_s—Screen bypass built into socket.
L_1—Copper strip 5" long, ¼" wide.
L_2, L_4—Brass plate lines, 2½" wide, 9¼" long.
L_3—Copper strip 4" long, 2" wide.
RFC_1—Z-144 Ohmite.
RFC_2—7" #22E wound ½" long on ⅛" dia.

of ⅜ × 2 inches. The back side is about 1⅛ × 2 inches with the adjusting screw insulator pushing against it near the top edge.

The plate circuit design can be applied to 2C39 tubes by using lines 2 inches wide and about 8 inches long mounted ¾ inch above the chassis.

3.5A 1296 MC Cavity Transmitter

The 1296 mc transmitter shown in figs. 3.46 and 47 started out as a power tripler with a 432 mc transmitter as an exciter. A voltage quadrupler power supply and Class B modulator of standard design was included. The low degree of modulation made it necessary to modulate two stages since the 2C39B tripler was of grounded grid design. Another 2C39 stage of similar design was then added to the rear of the tripler stage. It is an amplifier identical to the tripler except for the coaxial line connection into the 1296 mc cathode. The actual line circuit (half wave grounded at both ends) is used at 1296 mc on a third harmonic basis. Due to the voltage nodal point changes, the

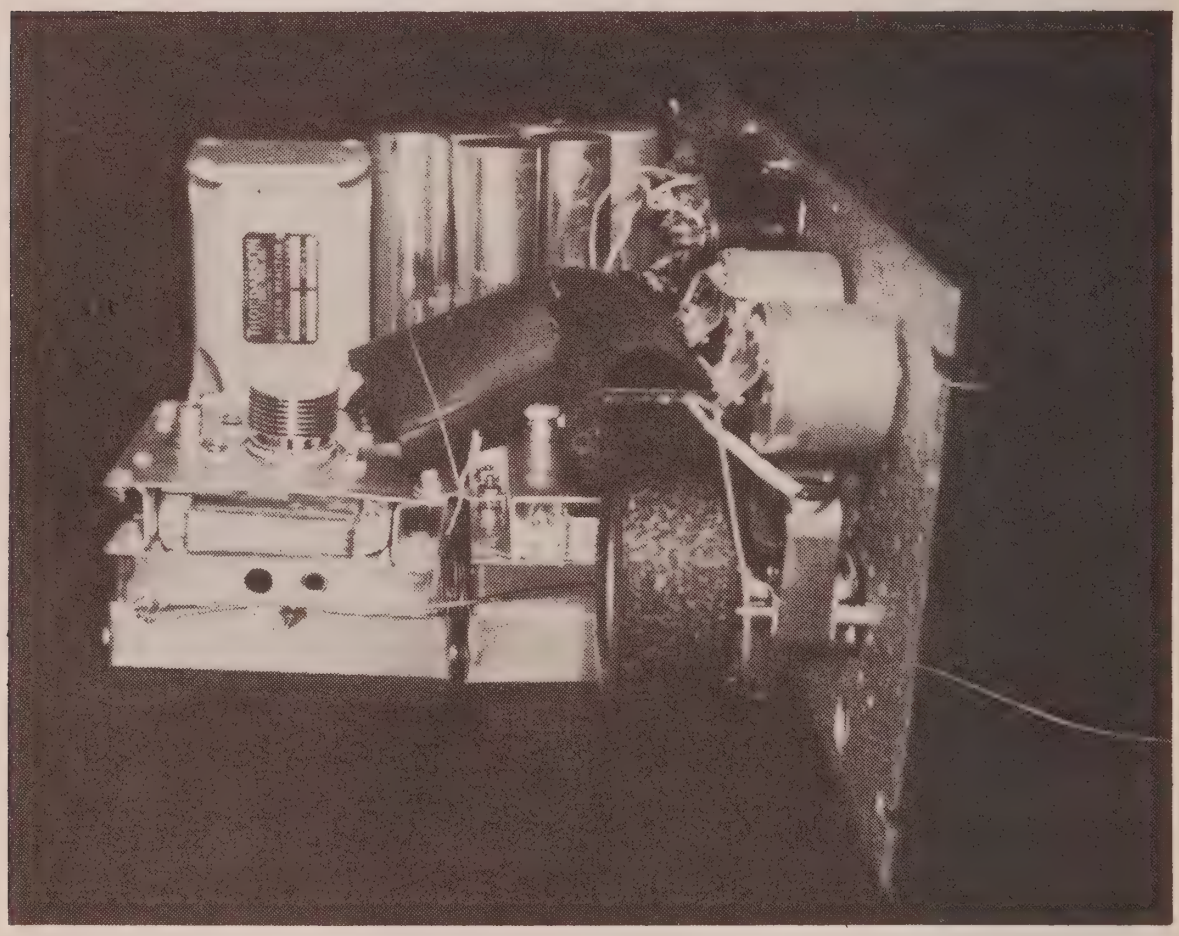

Fig. 3.46—Side view of 1296 mc cavity type transmitter. In rear is the power supply and modulator not discussed in this chapter. In the foreground are the two cavity tuned stages. They are both cooled by a squirrel cage blower driven by a phonograph motor. Rubber hose directs the air stream to both 2C39B tubes. The chassis attached to the panel is the tripler and the rear unit the amplifier. Observe the draw pull type handles (immediately under the top plates) for tuning the cavities. Shield cans on front panel house filament rheostats.

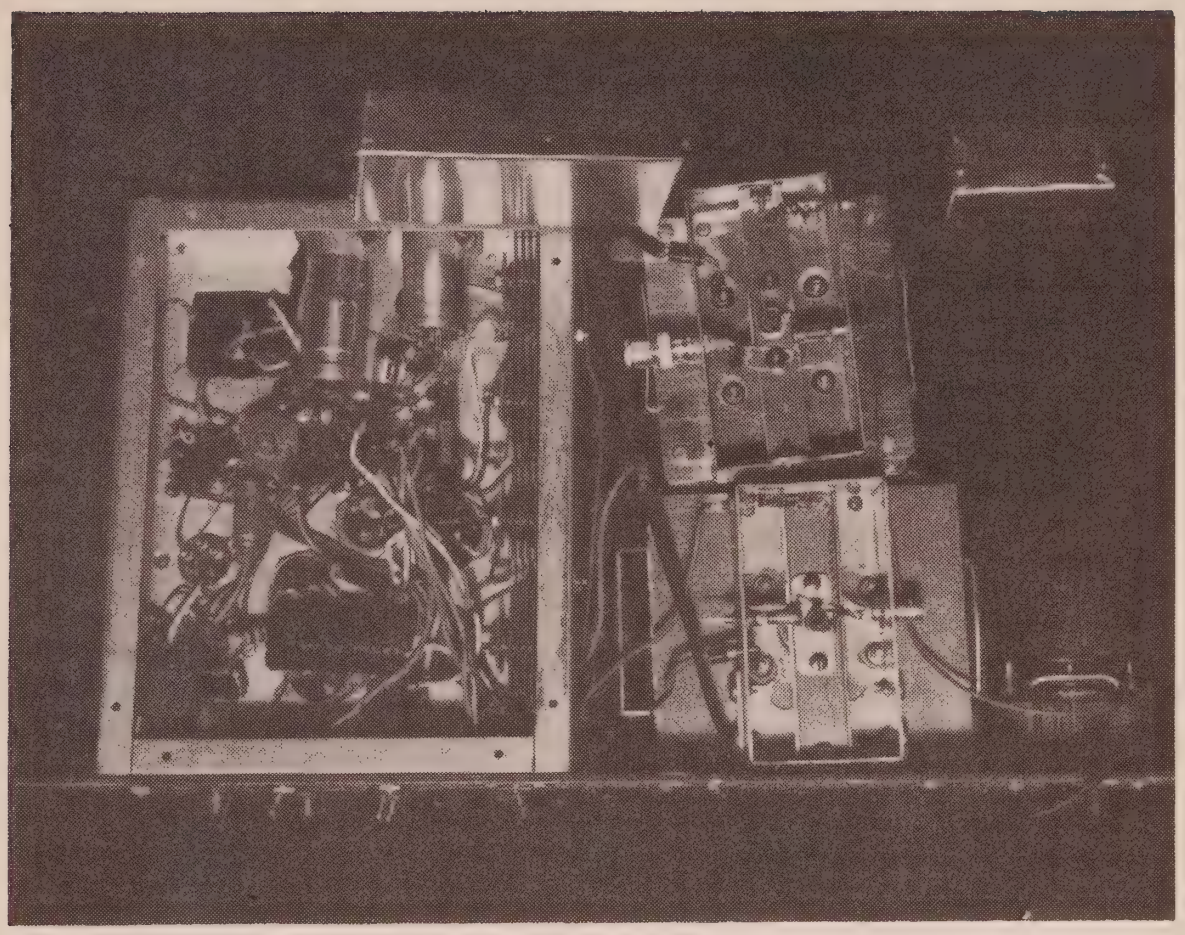

Fig. 3.47—Bottom view of 1296 tripler and amplifier showing boxed cathode lines. Chassis on front panel, the tripler, shows input connector directly connected to cathode with a 1-10 mmf piston capacitor on other side of connection. Fabricated filament chokes (6 to 9 turns) are visible connected to feedthrough capacitors. Rear unit, the amplifier, shows a direct connnection to the cathode line but capacitive coupling, tried later, gave better results.

coaxial line has to be capacity coupled by means of a small tab of copper on the BNC coaxial fitting. This is near another piece fastened to the cathode line about ½ inch from the cathode. Some point along the line near either end could be directly connected to the coaxial line.

The circuit diagram of the r.f. units is shown in fig. 3.48. The two plate tank circuits at 1296 mc are adjustable cavities tuned by sliding two sides in or out like drawers. If these sliders of stiff sheet brass are a good snug fit, they can be slid in or out, with some pressure, and yet make good electrical contact to the top and bottom plates of the resonant cavities. Some of the details of construction are shown in fig. 3.49. This type of construction was originated by K6AXN, well known for his 1296 mc work.

Type 2C39B tubes, at this frequency, should be operated at less than 6.3 volts heater supply. A couple of rheostats were used to reduce the 6.3 volt supply to a value as low as would give normal values of plate current readings (70 to 90 ma). The tripler is driven with a 4X150A tripler (144 to 432 mc). This unit has between 5 and 10 watts output. The 2C39B tripler to 1296 mc runs from 10 to 15 ma grid current and the amplifier 25 to 30 ma. The amplifier output measures between 6 and 7 watts with 38 watts input,

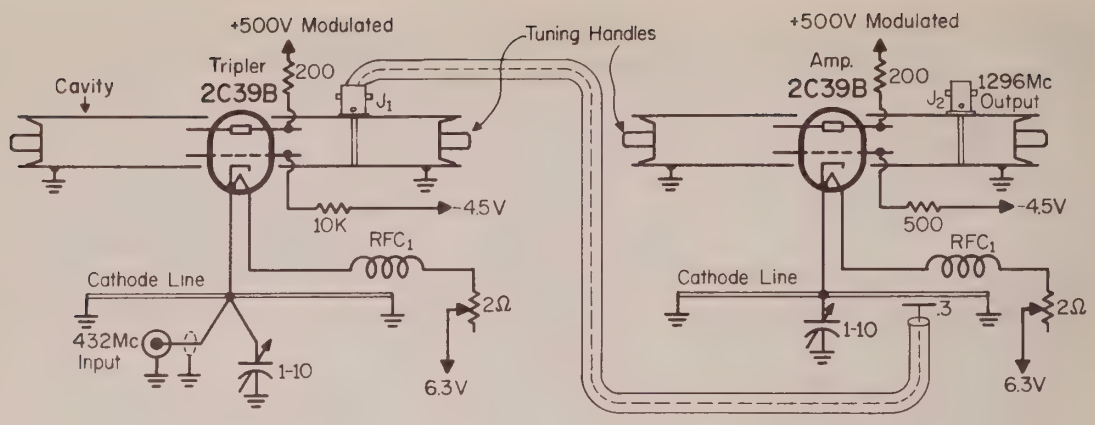

Fig. 3.48—A 1296 mc cavity type tripler and amplifier that may be excited by a 432 mc transmitter. Cavities are at d.c. ground potential and at zero r.f. potential on the outside surfaces. The output pick up lines from tripler and amplifier are stiff lengths of brass from the connector across the cavities. Cavity dimensions are given in fig 3.49. Both stages are modulated simultaneously. The cathode lines are mounted in boxes and the dimensions are shown in fig. 3.49.

J_1, J_2—BNC Fittings.
RFC_4—2¼″ of hookup wire, ¼″ diam. coiled.

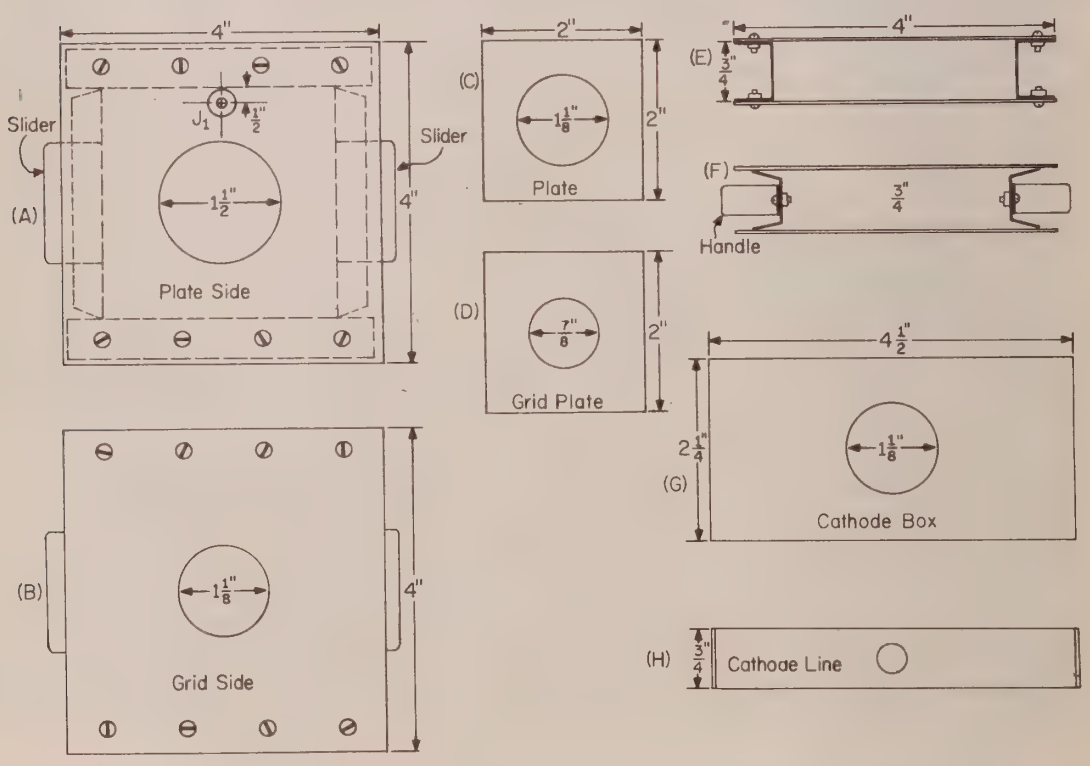

Fig. 3.49—Construction data for the 1296 mc cavities. Views A and B are the plate and grid sides. Views C and D are the brass mounting plates for the 2C39B. The contact springs are soldered to hole edge. The panels C and D are mounted on A and B but insulated from the ground plates with .01″ mylar sheet plastic. Views E and F show how the brass sliders for tuning are arranged. The slider plates are 3⅜″ long by 1¾″ wide and are bent in a U shape. The handles may be fabricated from scrap brass. Views G and H illustrate the cathode box and line.

corresponding to efficiencies between 15 and 18 per cent. The UHF r.f. wattmeter (borrowed for the test) was supposed to be accurate in this frequency range.

3.5B 1296 MC Flat Plate Units

In the search for simple to build designs at 1296 mc, the idea of half wave flat plate lines looked interesting. The results were a tripler and an amplifier, figs. 3.50 through 55, which can be built with readily available aluminum boxes 4 × 4 × 2 inches in size. The two units are nearly identical except for the cathode circuits. Both plate circuits are 2¾ × 2 inches in size with a spring brass tuning plate capacitor at one end and the tube near the other end. The output circuits are series tuned links made of a piece of sheet copper ¼ inch wide and about 1½ inches long. The last ¼ inch of this strap link is bent down to be near the grid bypass capacitor plate since it is at r.f. ground potential. This forms a series capacitor, adjustable by changing the air gap. It is likely that capacity coupling with a short copper line and air gap to the end part of the plate line might be more effective. The plate tuning capacitor is a scaled down version of those used on 432 mc, previously described. The grid bypass plate (with .01 inch teflon sheet insulation) and contactor ring for the 2C39 is similar to those used on 432 mc except the plate area was reduced a little to clear the lips of the 4 × 4 × 2 box. The cathode

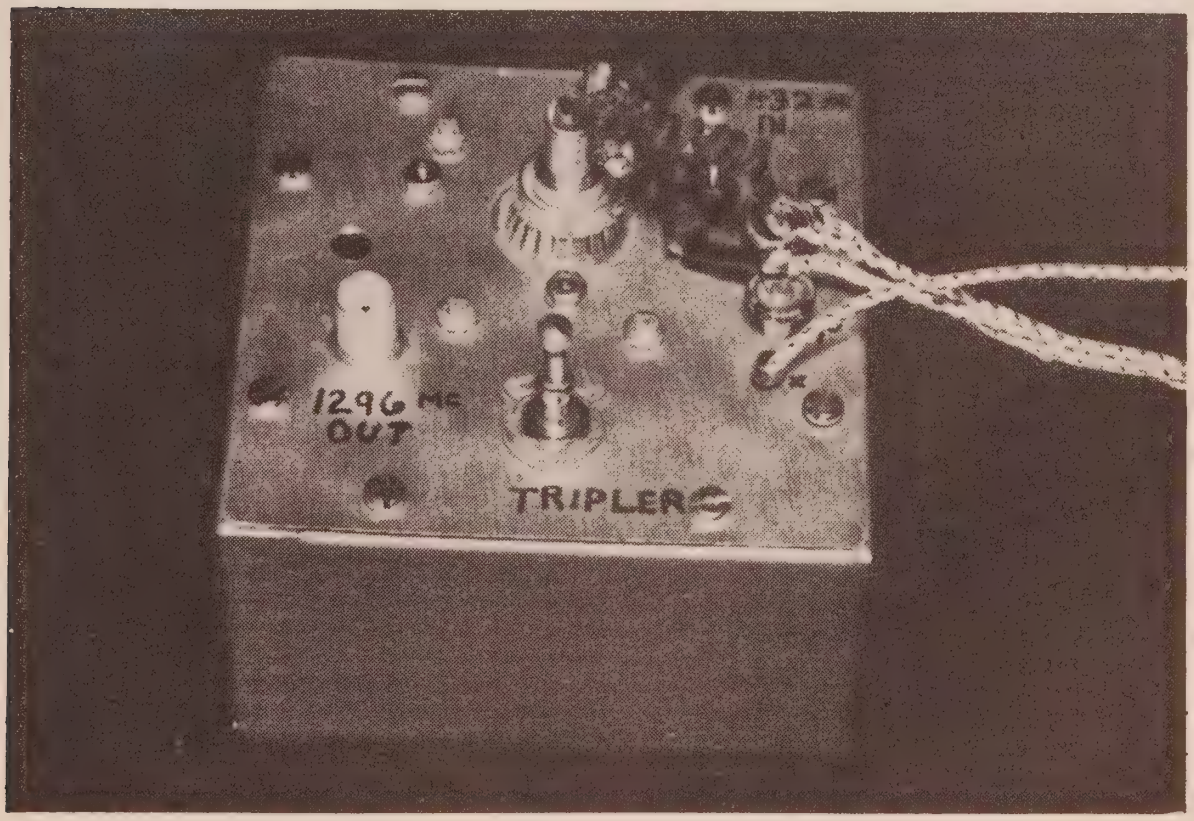

Fig. 3.50—Flat plate 432 to 1296 mc tripler. Screw in center foreground tunes spring brass capacitor C_2. The cathode inductance L_1 is hidden behind the filament r.f.c.

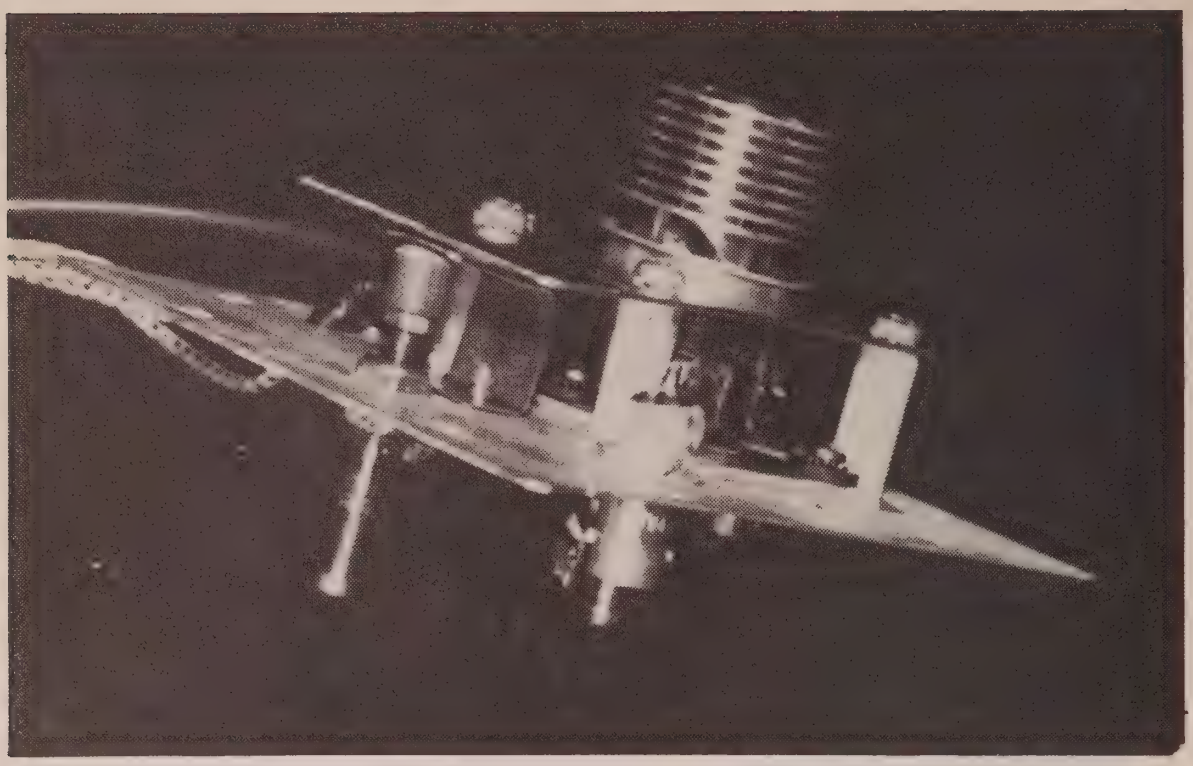

Fig. 3.51—Side view of tripler showing adjustable C_2 and the flat plate L_2.

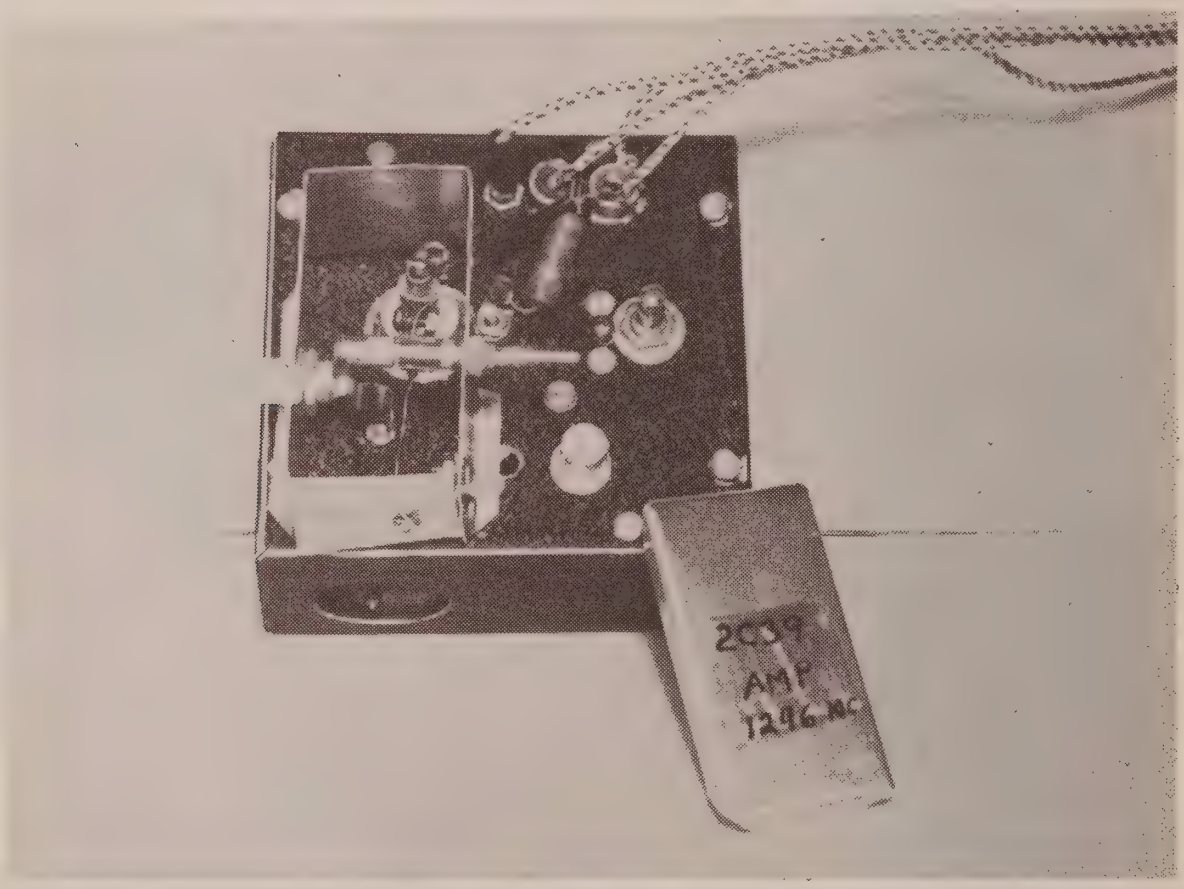

Fig. 3.52—Top view of the 1296 mc amplifier showing the input circuit with cathode box mounted. Input jack on left side of cathode box is capacitive coupled to L_1, the copper strip clamped on the cathode and grounded to the cathode box. Piston capacitor C_1 is mounted opposite the input connector. Output connector is to right of cathode box. Adjustment screw above right of the output is for C_2.

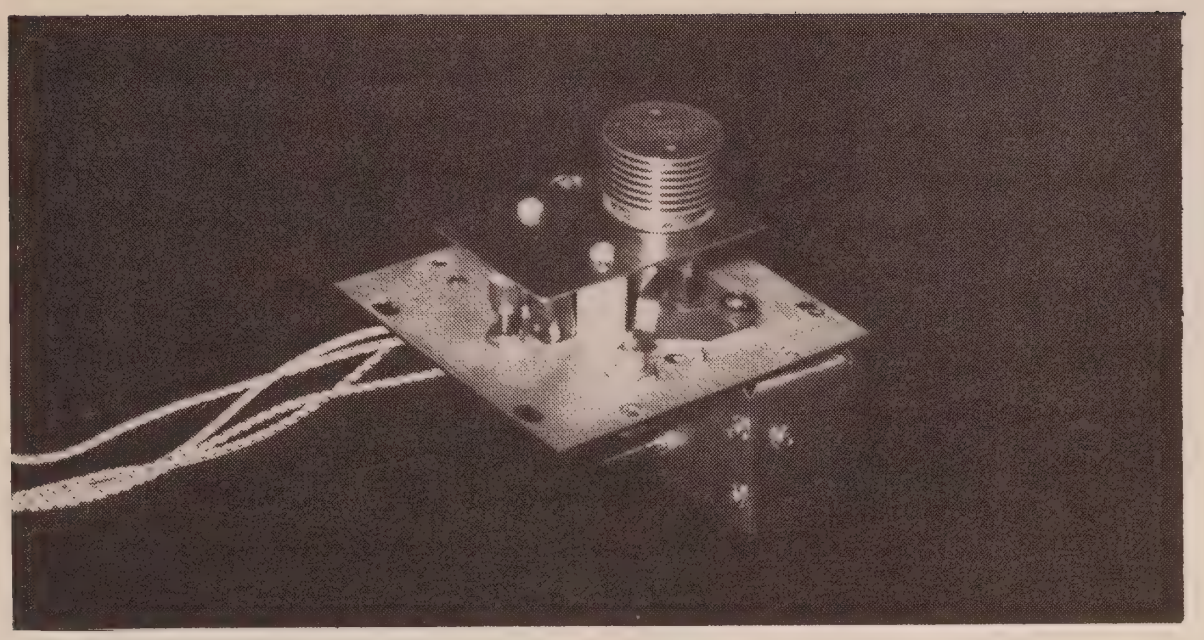

Fig. 3.53—Bottom view showing the output coupling loop in the foreground and the tuning adjustment for C_2 on the left.

shielding boxes are 1¼ inches wide, 2½ inches long and 1½ inches deep. The photographs of the tripler were taken before the cathode was shielded. The cathode line is hidden behind the bulky heater r.f. choke in fig. 3.50.

The 1296 mc cathode circuit is a strip of sheet copper ⅜ inch wide and 3½ inches long with one end wrapped around the cathode sleeve. It is clamped to the cathode by means of a small machine screw visible in fig. 3.52.

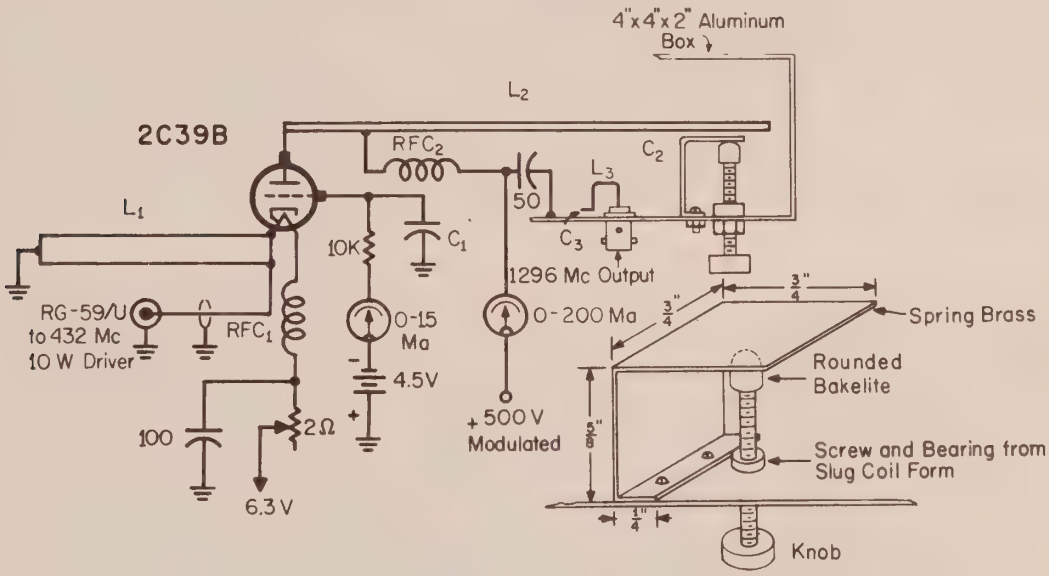

Fig. 3.54—Circuit of the 1296 mc flat plate line tripler.

C_1—1" × 2¼" plate, approx., insulated from mounting plate with .01" Teflon.
C_2—See sketch.
C_3—¼" × ¼" on end of L_3, 1/16" above ground.
L_1—1¾" long × ¼" wide #18 brass.
L_2—2¾" long × 2" wide #18 brass.
L_3—1½" long × ¼" wide sheet copper with end forming C_3.
RFC_1—7 turns of hookup wire.
RFC_2—3" of #22E, ½" long, ⅛" dia.

The other end is bolted to the aluminum shield can so the actual line is 2 inches long between ground and cathode sleeve. A piston type plunger capacitor is mounted in one side and connects to the cathode line near its center. The type BNC coaxial fitting has a small piece of ¼ inch wide sheet copper soldered to it. It is then bent to form a small coupling capacitor to the center of the line, fig. 3.52. The piece of coaxial line to the tripler was made an electrical multiple of half waves, in this case 6 inches.

This 1296 mc transmitter in preliminary tests seemed to have a little more r.f. output for similar inputs when comparing it to the cavity type units. The tripler is operated at 6 to 10 ma of grid current and 50 to 60 ma of plate current when driving the amplifier to about 20 ma of grid current. Both units are connected to a 500 volt supply. The amplifier plate current is 75 ma. The values of grid and plate current are somewhat different when using different grounded grid tubes. Type 2C39, 2C39B and 3CX100A5 triodes were used in these tests. Best results were obtained with the last two types.

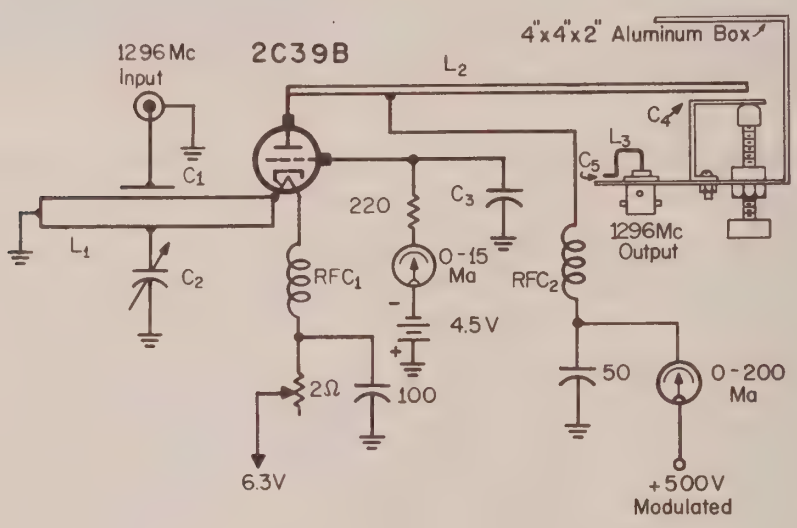

Fig. 3.55—Circuit of the 1296 mc flat plate line amplifier.

C_1—Copper sheet tab ¼" × ¼" near center of L_1.
C_2—1-10 mmf piston type capacitor.
C_3—1" × 2¼" plate (approx) insulated from mounting plate with .01" Teflon.
C_4—Same as C_2 in fig. 3.54.
C_5—See description of L_3.

L_1—2" long × ⅜" wide copper strip.
L_2—2¾" long × 2" wide #18 brass.
L_3—Copper strip 1" long × ¼" wide with ⅜" of the end placed within ⅛" to 1/16" from the chassis to form C_5.

RFC_1—3" of #22E, ⅛" diam. coiled.
RFC_2—2¼" of #22E, ⅛" diam. coiled.

4

Modulation

THIS chapter covers, briefly, the designs of various plate modulators as well as screen and n.b.f.m. (narrow band frequency modulation) systems suitable for use with VHF transmitters. The systems shown here are designed to provide a high average level of modulation rather than high fidelity since a great portion of VHF and UHF communication is over difficult path conditions such as during 50 mc openings or non-line-of-sight paths on the higher frequency bands. The "modulator" shown in the first illustration, fig. 4.1, is still the most effective for amateur long distance work on any VHF band, and most amateur DX records are made with c.w. Next in effectiveness are

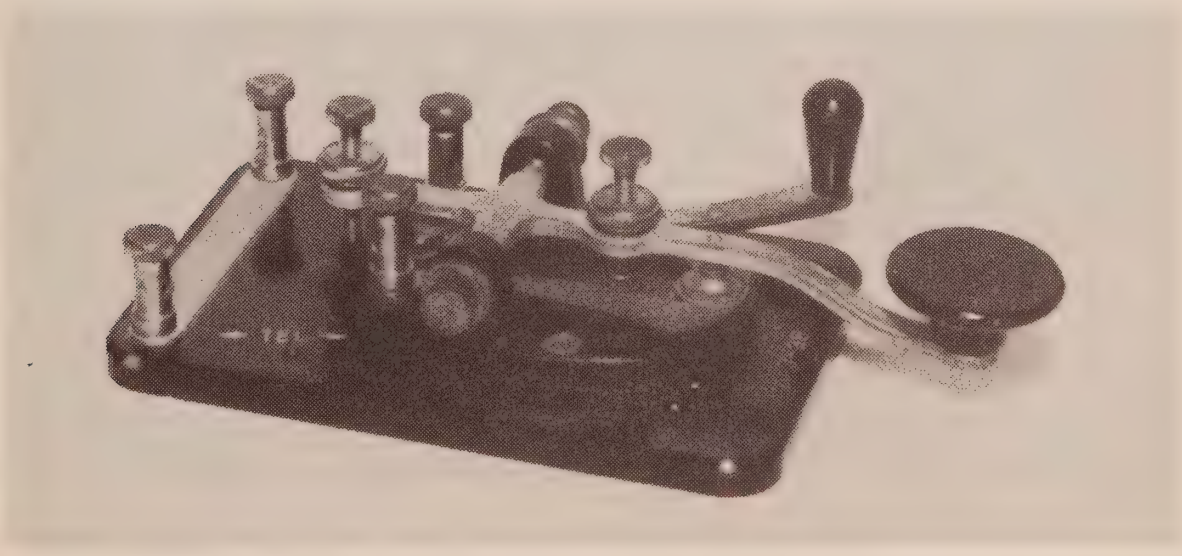

Fig. 4.1—Basic modulator with which most DX contacts are made.

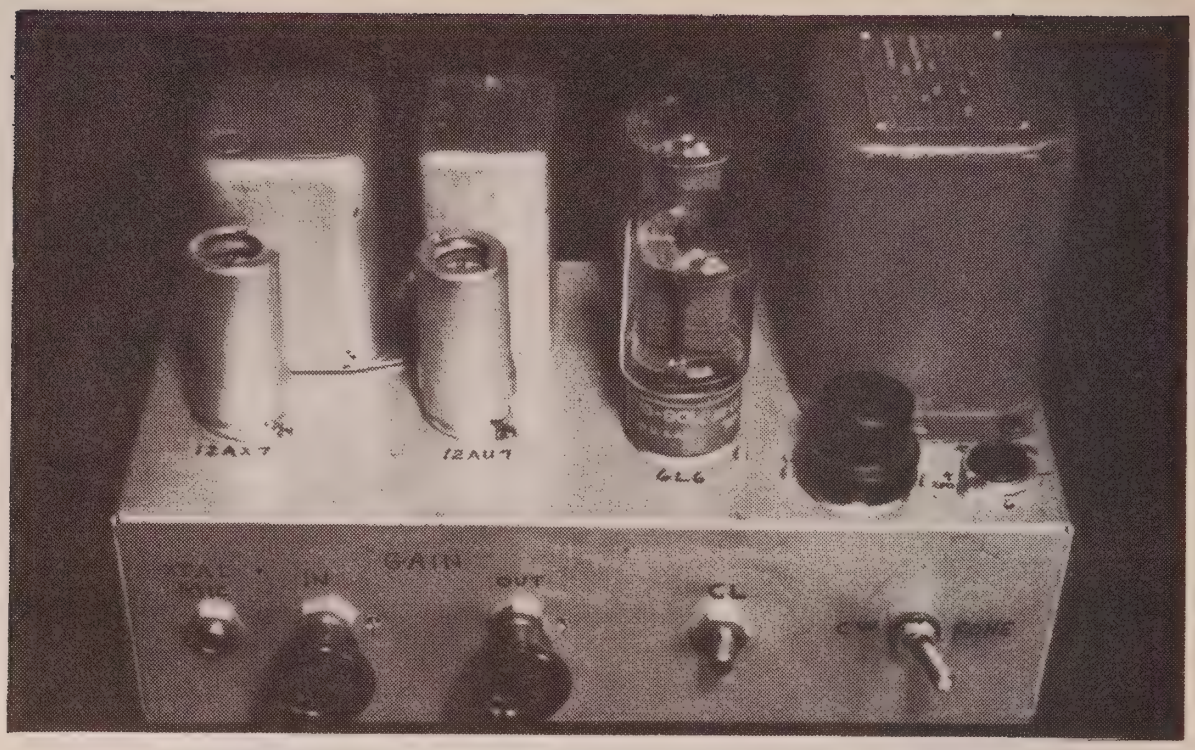

Fig. 4.2—Modulator using push pull 6L6's. The rear left can contains the 3 kc low pass filter. To the right of it is the push pull input transformer and on the extreme right is the output transformer. The slotted shaft next to the PHONE-C.W. switch is the clipper level adjustment.

single or double sideband suppressed carrier modulated transmitters but due to the cost and other factors, these systems are not in general use on these bands. The large majority of signals on these bands are amplitude modulated by means of audio power amplifiers connected in series with the d.c. plate plate voltage power supplies of the final r.f. amplifier in the transmiter.

4.1 The 6L6 Modulator

This modulator, shown in figs. 4.2, 3, and 4, is a small power amplifier suitable for plate modulating a 10 to 25 watt transmitter, or screen modulating a large transmitter with one or two 4X150 tetrode tubes. The redeeming feature of screen modulation, in spite of its lower efficiency, is the ease of applying it as an auxiliary scheme to the modulator shown in fig. 3.1. The 6L6 modulator furnishes 9.5 watts of audio power into a 3300 ohm load and 12 watts into a 5000 ohm load with a 225 volt, 120 ma plate supply and one to one ratio modulation transformer. More power output can be obtained with a higher voltage supply, and the modulation transformer should be chosen to match the Class C load to the audio amplifier. The output (plate to plate) load impedance is listed in tube tables for various values of plate voltage and grid bias conditions. The Class C load is calculated by dividing the d.c. plate supply to the r.f. amplifier by its d.c. plate current under normal antenna load conditions. As an example, a 6360 Class C amplifier at 250 volts and 80 milliamperes (.08 amperes) would be a load of $\frac{250}{.08} = 3120$ ohms. The power input would be $250 \times .08 = 20$ watts. The average audio power needed would be slightly more than one half of

this value since a 6360 tube requires some audio power applied to the screen grid as well as to the plate circuit. The 6L6 modulator would be quite satisfactory for this r.f. amplifier.

Two types of speech peak clippers were built into this 6L6 system. The output negative peak "clipper" uses a diode 6H6 tube, in series with a resistor, across the transformer output winding to furnish a load to the audio amplifier during negative voltage excursions. This loading effect tends to reduce the peak negative power from getting to the r.f. stage and causing negative peak clipping. Negative peak clipping results in splatter of spurious signals in the transmitter output and must be avoided. Any clipping of speech peaks must be done in the audio system where it is relatively easy to use some audio filtering to eliminate spurious audio frequencies beyond the nornal pass band of 3000 or 4000 cycles per second. The "output clipper" and resistor are not really a clipping circuit but act as a negative cycle load to accomplish this result. By preventing negative peak clipping in the r.f. stage, a higher average modulation level may be used to increase the transmitter effectiveness.

The speech clipper having two crystal diodes, type 1N52A following the first a.f. amplifier, a 12AX7 tube, is one of several types which clip both positive and negative speech peaks. A one or two section low pass audio filter with a 3000 or 3500 cycle cut-off is needed after this clipper in order to remove audio harmonics generated by the clipper which fall in the region beyond 3 to 4 kc. These higher audio frequencies would make the transmitter occupy more bandwidth than necessary for communication purposes and interfere with other transmitting stations needlessly. This low-pass filter was designed as a unit to be used with about 500 ohm terminations. A plate to 500 ohm, and a 500 ohm to grid transformer on each side of the filter is

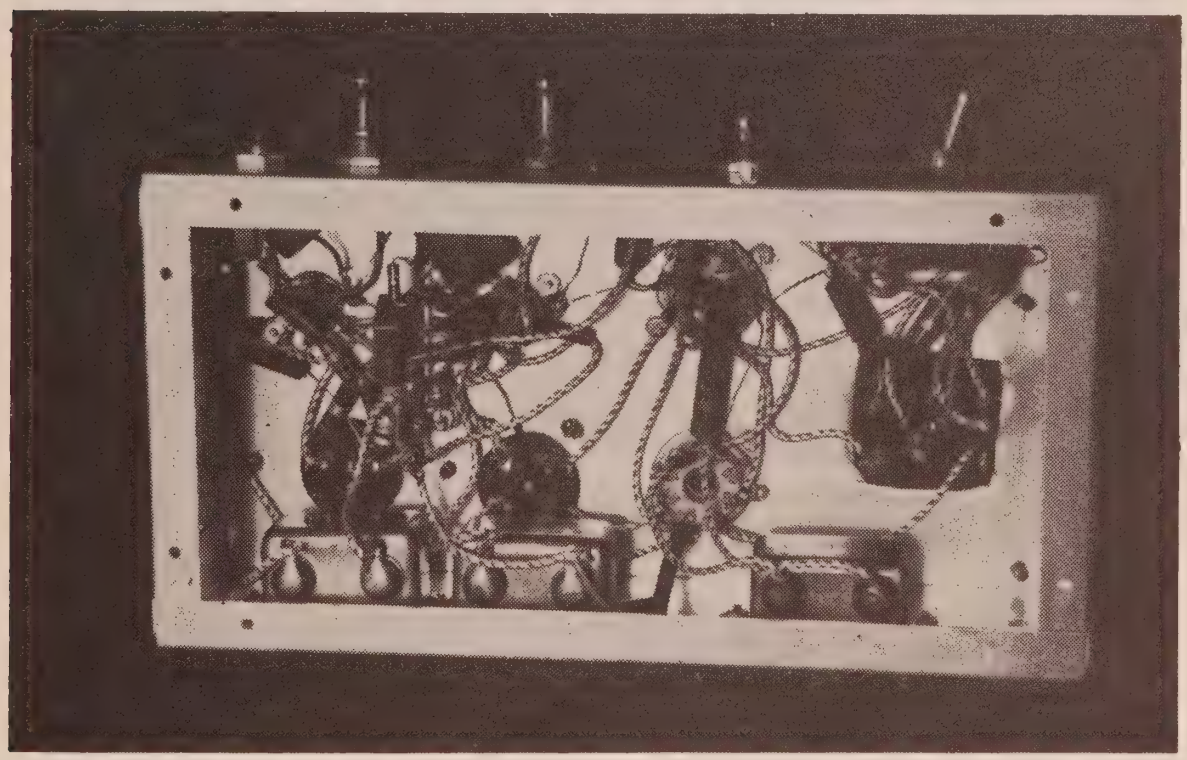

Fig. 4.3—Bottom view of the 6L6 modulator. Clipper diodes may be seen connected from the 12AU7 socket to the terminal strip.

is often used to match impedances. However, in fig. 4.4 a 12AU7 is connected as a cathode follower with 500 ohms output and the second section as a grounded grid cathode driven amplifier to do the impedance matching. The audio amplification of the 12AU7 is about the same as would be obtained with a single triode such as a 6C4 or 6J5 with two a.f. transformers and the filter unit. Either system is equally effective. Standard handbooks show other clipper and low pass filters which may be used in any speech amplifier system if the latter has 10 to 20 db more gain than is needed for the usual close-talking microphone operation.

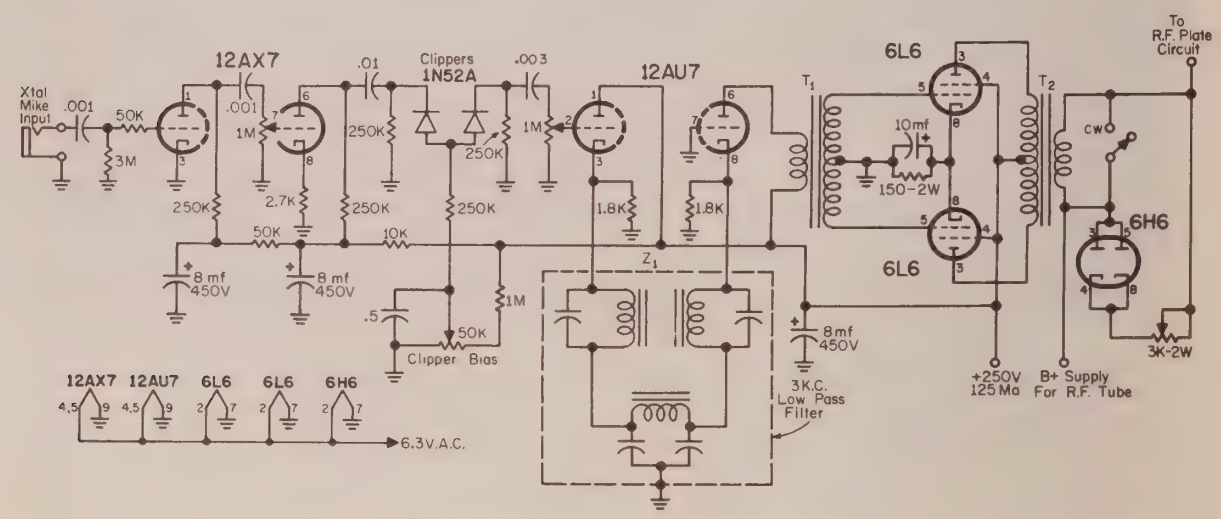

Fig. 4.4—Circuit of the 6L6 modulator employing a speech clipper, 3 kc low pass filter and negative cycle loading.

Z_1—3 kc low pass filter.
T_1—1:2 interstage transformer, single plate to pp grids.
T_2—8k plate to plate to r.f. load, (see text) 15 to 25 watts.

In checking power output values of any of the modulators shown here, a large wire wound resistor should be substituted for the Class C load and the power calculated from the expression $\frac{E^2}{R}$ where R is the load resistor in ohms and E is the audio voltage measured across the resistor by means of an a.c. voltmeter. A steady whistle into a microphone may be used to produce audio power output; however, a small audio oscillator is more satisfactory. The output diode circuit must be disconnected when using a pure resistor load, since its purpose is to make a Class C stage look more like a pure resistive load over the whole of any audio cycle.

For convenience in testing, several types of modulators were built for the handbook on 5 × 9½ × 2½ inch aluminum chassis. Other sizes and parts layouts should be satisfactory, remembering that larger sizes are easier to wire and require less stacking of parts in layers. I have the bad habit of using a chassis about one size smaller than should be used for all kinds of amplifiers as may be noted in looking at many of the illustrations in this book. A classic example is the screen grid modulator illustrated later in this chapter.

4.2 The 6W6 Modulator

The modulator shown in figs. 4.5, 6, and 7 furnishes 12 watts into a 3300 ohm load and 14 watts into a 5000 ohm load within allowable distortion limits. Two 6W6GT tubes are connected as zero bias triodes for Class B operation. A 1:1 or 1:½ ratio output transformer with a 10 to 20 watt rating is suitable. The latter impedance ratio (1:.7 turns ratio) would make a 3000 ohm Class C load look like a 6000 ohm plate to plate load on the audio system, a good value for these Class B tubes with a 250 volt supply. Class B audio tubes require some grid driving power with good regulation which can be furnished by a 6V6GT tube with negative feedback. The 6J5–6V6GT combination has negative voltage feedback from the plate to cathode circuits to lower the output impedance of the 6V6GT driver stage. This arrangement gives more audio power output than can be obtained by connecting the 6V6GT screen grid to plate as a power triode stage.

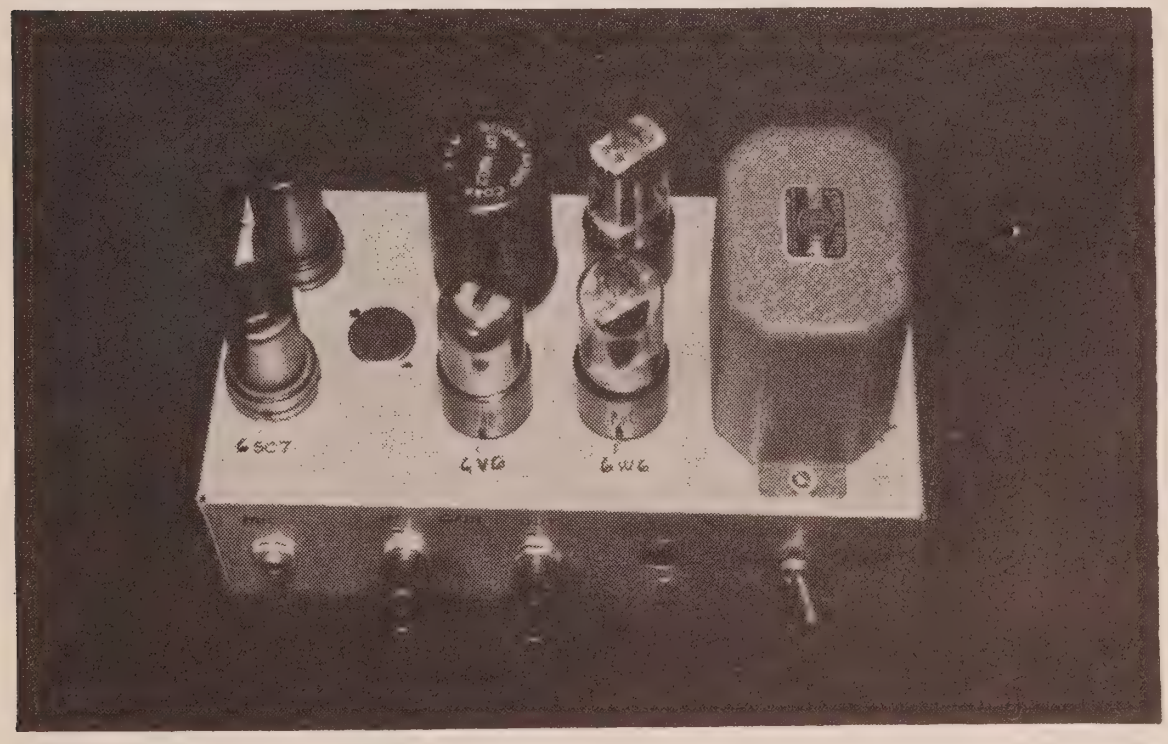

Fig. 4.5—A 12 to 14 watt modulator employing 6W6's. The small transformer is the push pull input. The two gain controls can adjust the clipping level as explained in the text.

The output negative peak loading diode makes use of a 380 volt (inverse peak rating, 117 volt r.m.s. type) selenium rectifier with a 100 ma rating. The resistor in series with this rectifier, fig. 4.7, should have some value of about ¾ of the Class C load value and be capable of dissipating at least two watts for this particular modulator. The optimum value of resistance can be found by trying different values and checking the r.f. stage for minimum negative peak clipping at high values of modulation. It is necessary to arrive at a compromise value—one which reduces or eliminates negative peak clipping and splatter in the r.f. stage but does not appreciably distort the speech quality.

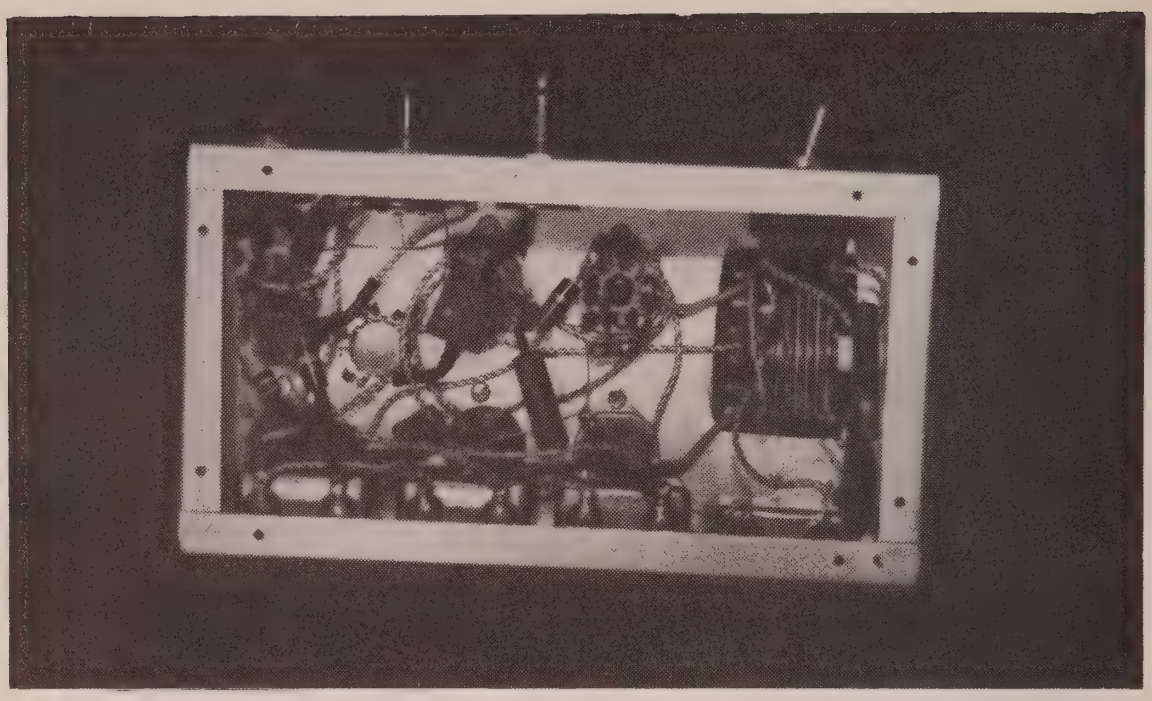

Fig. 4.6—Bottom view of modulator showing the selenium and load resistor on the right beneath the modulation transformer.

A dual triode 6SC7 tube is connected as a two stage resistance coupled amplifier for a crystal microphone input (close-talking service). The second half of the 6SC7 is used as an amplifier and limiter by reducing the plate voltage to a lower than normal value. Excessive speech peaks are limited or clipped to a good extent without going to a separate clipper system. It is not as effective, but is an aid in preventing accidental overmodulation. A small amount of harmonic suppression takes place during these peak limiting periods if a .002 mf capacitor is connected from plate to ground in this tube.

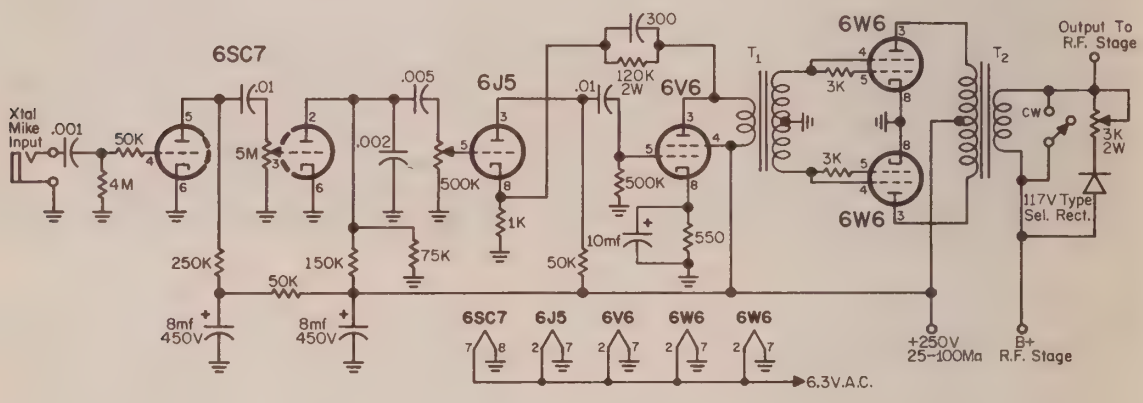

Fig. 4.7—Circuit of a 12-14 watt modulator using zero bias Class B 6W6's in the output. Speech clipping is accomplished in the second half of the 6SC7 by using a low plate voltage. A large amount of negative feedback is used in the 6V6 driver stage.

T_1—Class B push pull input transformer 3:1 to each secondary.
T_2—Modulation transformer, 6K plate to plate to r.f. load, 10 to 20 watts.

The amount of limiting can be adjusted by manipulating the relative settings of the two gain controls.

A small Class B driver transformer with a turns ratio of not more than three to one from primary to each half-secondary is desirable for driving the two grids of the 6W6GT tubes. The amount of drive applied to the control grid is less than to the screen grid since a 3000 ohm resistor is connected between the two grids of each tube. The plate current is around 10 to 20 ma with no signal input and increases to from 50 to 100 ma with speech signal input. This means that the power supply should have good regulation since its load current varies over a wide range.

4.3 6Y6G Class B Modulator

A more powerful modulator is shown in figs. 4.8, 9, and 10 in which a pair of 6Y6G or 6Y6GB tubes are used in zero bias Class B service. A 400 volt power supply with swinging choke input filter is needed. The audio power is sufficient to plate modulate a 50 or 75 watt transmitter which might be operated from the same heavy duty 400 volt power supply.

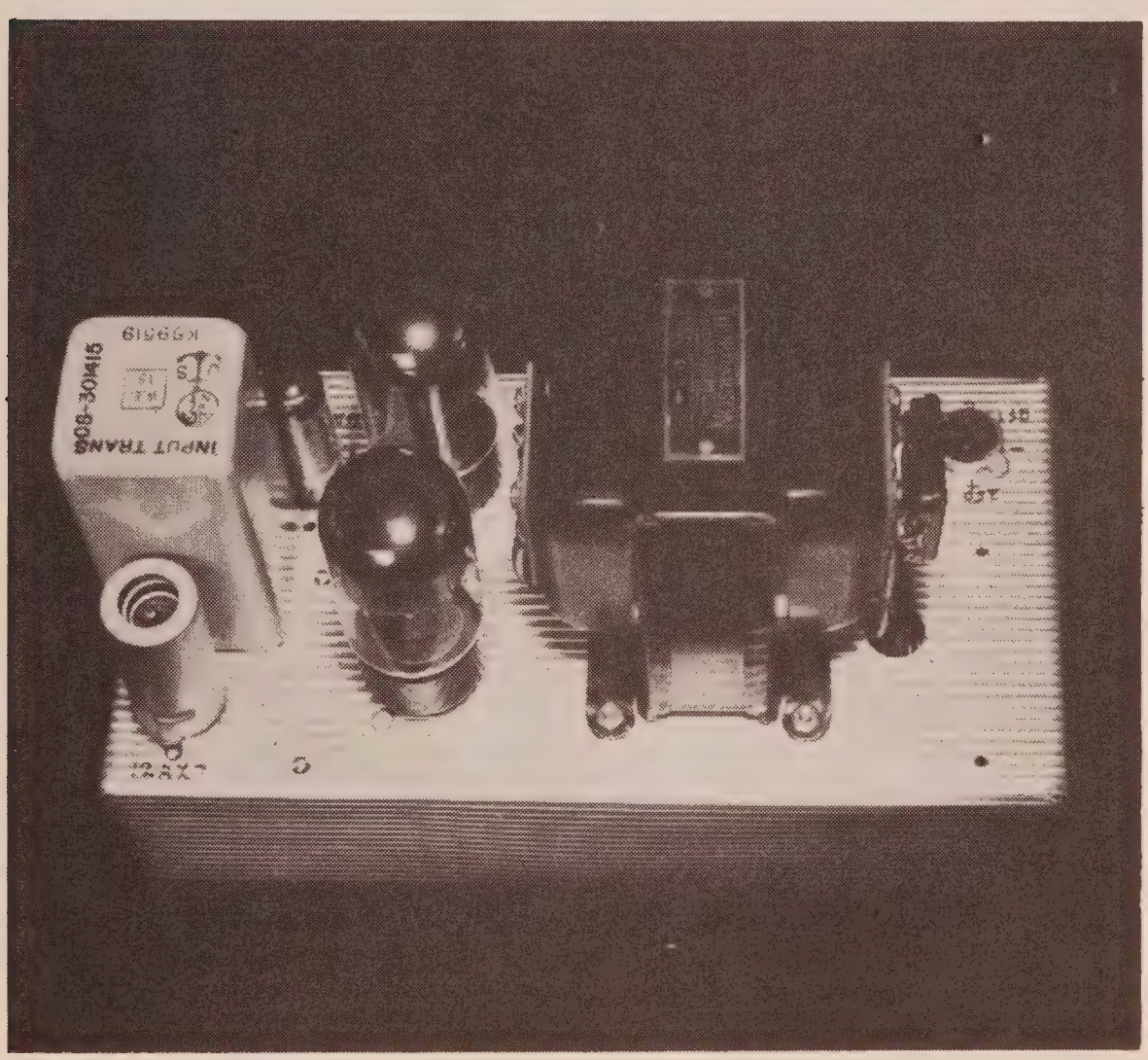

Fig. 4.8—A 40 watt Class B modulator using push pull 6Y6's. The 6AQ5 driver is just visible behind the input transformer.

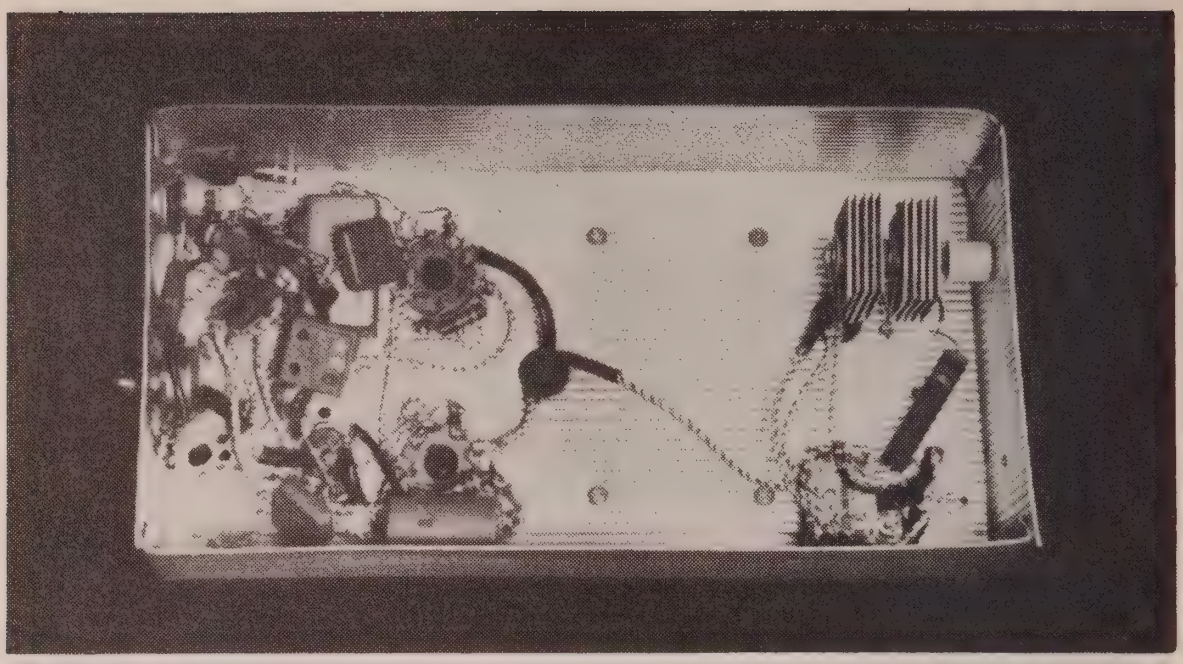

Fig. 4.9—Gain control and input jack are visible on the left flange of the chassis. Mounted on the right flange are two seleniums in series for negative cycle loading.

The audio power output available for modulating a Class C amplifier was measured at 15 watts with a 250 volt supply, and 40 watts with a 400 volt supply. The speech amplifier and Class B driver stage were made as simple as possible for connection to a crystal microphone. A 6AQ5 tube supplies audio power through a 1:1 ratio of primary to each half of the secondary of a small Class B or Class AB_2 transformer. Negative feedback across the 6AQ5 tube reduces the plate impedance to a value suitable for this service. The screen grids of the 6Y6GB tubes are driven from zero to around 75 or 100 volts, with some of this voltage being applied to the control grids through 24,000 ohm resistors. The tubes are operated as zero bias Class B tubes with fairly high grid impedance as compared to a larger triode tube such as an 811. For this reason the small driver transformer should have a turns ratio of around unity, but be large enough to handle at least 20 ma of d.c. in each winding.

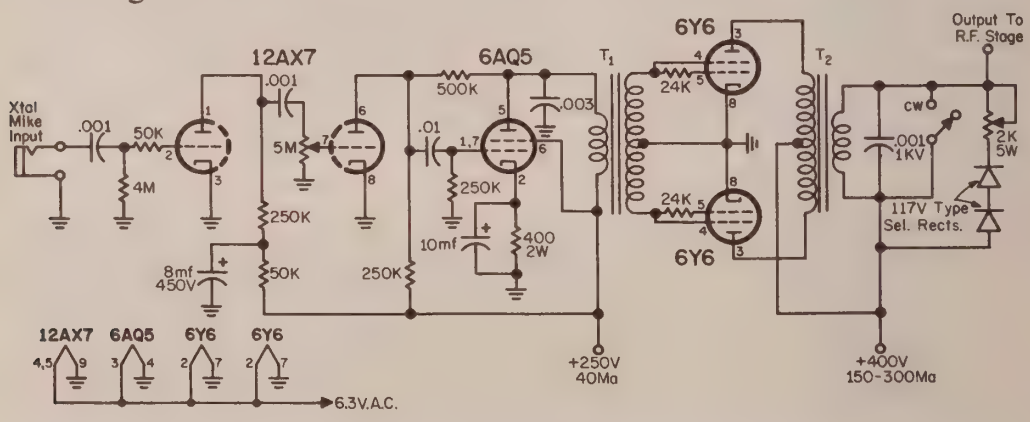

Fig. 4.10—Circuit of 40 watt modulator. No speech clipper is included.

T_1—Class B or AB_2 push pull input transformer, 1:1 to each secondary.

T_2—Modulation transformer, 8K plate to plate to Class C r.f. load of 2.5K at 50 watts.

The modulator output voltage is sufficient to slightly exceed the inverse rating of 380 volts of ordinary selenium rectifiers which are normally used on 115 volt a.c. line circuits. Two were connected in series with a suitable resistor to produce a loading effect on the negative voltage cycles and so minimize or eliminate negative peak clipping effects in the Class C r.f. stage. A switch is connected across the modulation transformer secondary in order to permit c.w. as well as voice operation. The complete modulator is built with a 5 × 10 × 2½ inch aluminum chassis.

4.4 A 50 Watt Modulator

A pair of 6AV5GA tubes connected in Class B as shown in figs. 4.11, 12, and 13 give measured power outputs of 50 watts with a 400 volt supply, 18 watts with 250 volts, and 60 watts with a 475 volt supply. Tubes such as 6Y6GB and 6AV7GA tubes are designed to operate in Class A service with relatively low values of d.c. screen voltage and are therefore more suitable than higher screen voltage tubes such as 6L6G or 807 tubes when used in small Class B amplifiers. In this method of operation, the screen grids are driven with audio power with a small amount, 5 to 10 percent, being applied to the control grids. No grid bias is needed and no regulated screen supply is required but more power is used to drive the grid circuits than in a Class

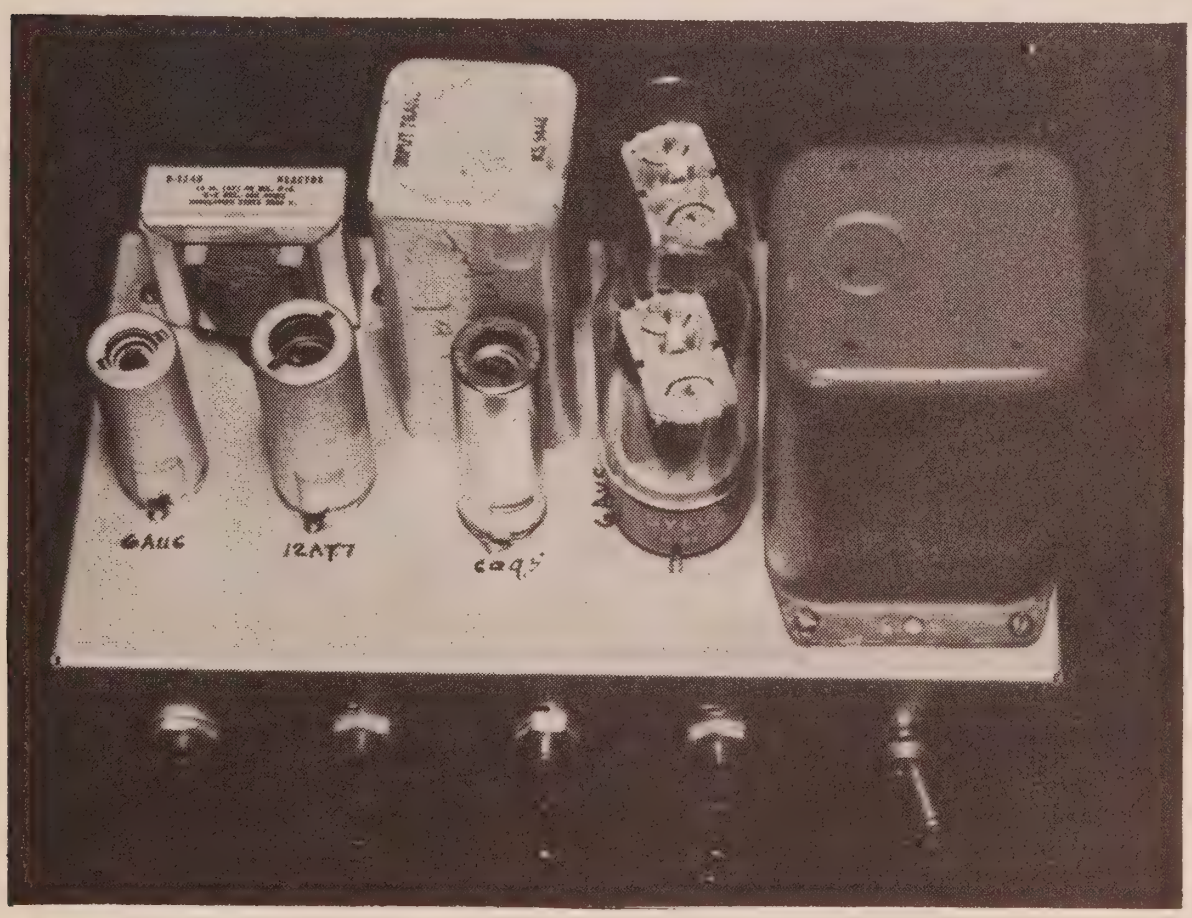

Fig. 4.11—A 50 to 60 watt Class B modulator employing push pull 6AV5's. The tube line up is from left to right; 6AU6 speech amp., 12AT7 clipper, 6AQ5 driver, push pull 6AV5's. The inductance in rear left corner is part of the low pass filter. Front panel controls are, from left to right: MIC. INPUT, 6AU6 INPUT, CLIPPER OUTPUT, CLIPPER LEVEL control and PHONE-C.W. switch.

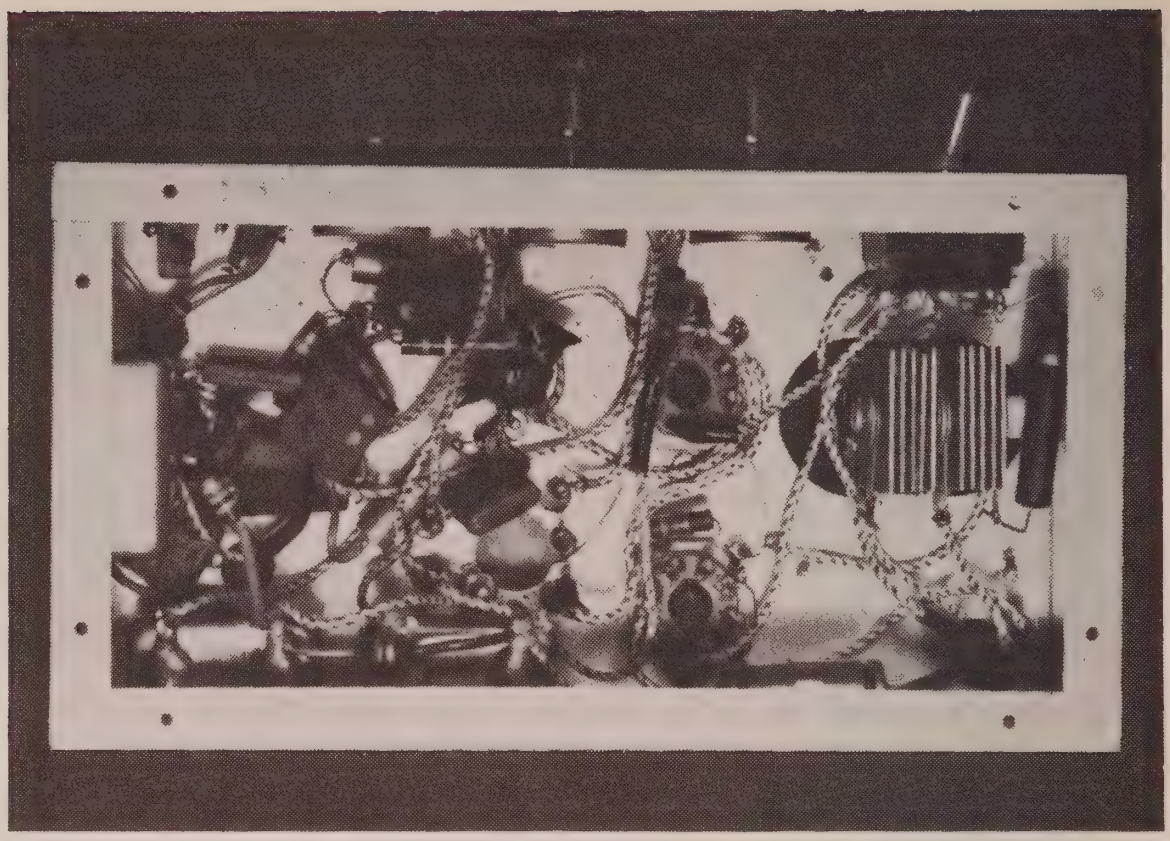

Fig. 4.12—Bottom view of the 60 watt modulator. The two selenium rectifiers placed in series for negative cycle loading can be seen at the right of the chassis.

AB system. Other tubes similar to the 6AV5GA may be used in Class B operation with preference given to those having the higher plate dissipation ratings. In choosing tube types, the designer should look for those listed in tube handbooks with screen grid voltages of 100 to 150 volts rather than the 250 volt types.

The speech amplifier in this 50 watt modulator has a tube added to serve as a speech clipper following the 6AU6 voltage amplifier. The 12AT7 dual triode functions as a clipper and amplifier both, and the output can be held fairly constant for about 10 or 15 db of clipping of voice peaks. The single section low pass filter in the 12AT7 is necessary to remove the higher frequency components generated in the clipper circuit. This filter prohibits the use of inverse feedback across the 6AQ5 tube unless another resistance coupled stage is added between the filter and the 6AQ5 driver. Apparently the Class B stage grid impedance is high enough and constant enough to permit operation of the driver stage without inverse feedback. Space in the unit did not permit adding an extra tube such as 6C4, and tests indicated reasonably good operation without negative feedback.

The three variable controls, fig. 4.13, are the usual audio gain control ahead of the clipper in the 6AU6 grid circuit for adjusting the room noise pick-up and relative amount of speech clipping, and the clipper adjustment, and output gain controls. The clipper adjustment controls the plate voltage to both triodes and sets the maximum output from the clipper. The output gain control is for the purpose of setting the audio level for approximately 100 per cent modulation of the transmitter.

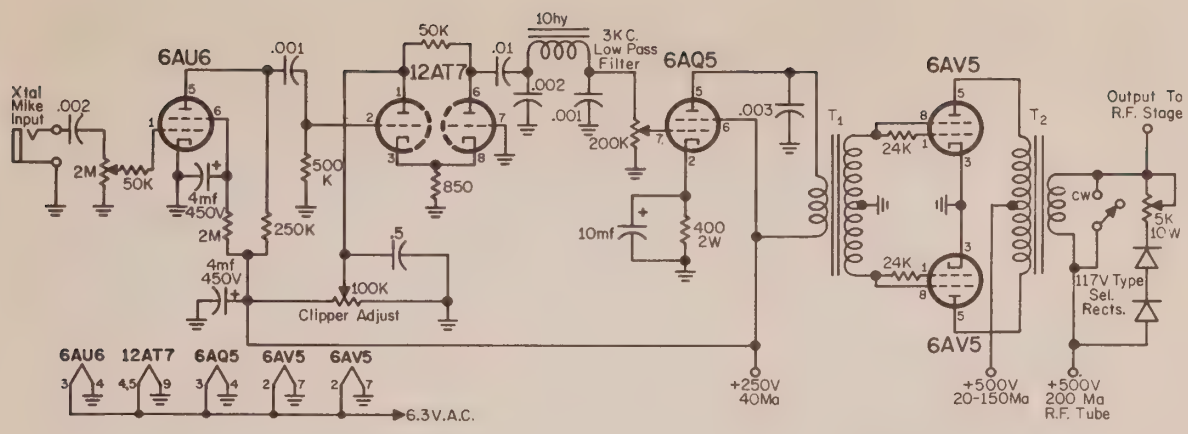

Fig. 4.13—A 50 to 60 watt modulator employing an adjustable speech clipper, home brew low pass filter and negative cycle loading.

T_1—Class B or AB_2 push pull input transformer 1:1 to each secondary.
T_2—Modulation transformer, 9K plate to plate to 2.5K, 50 watts.

4.5 Screen Grid Modulator

The type of screen grid modulator shown in figs. 4.14, 15, and 16 has been in service for a year at W6AJF where it is used for modulating six different transmitters on different amateur bands. These transmitters range

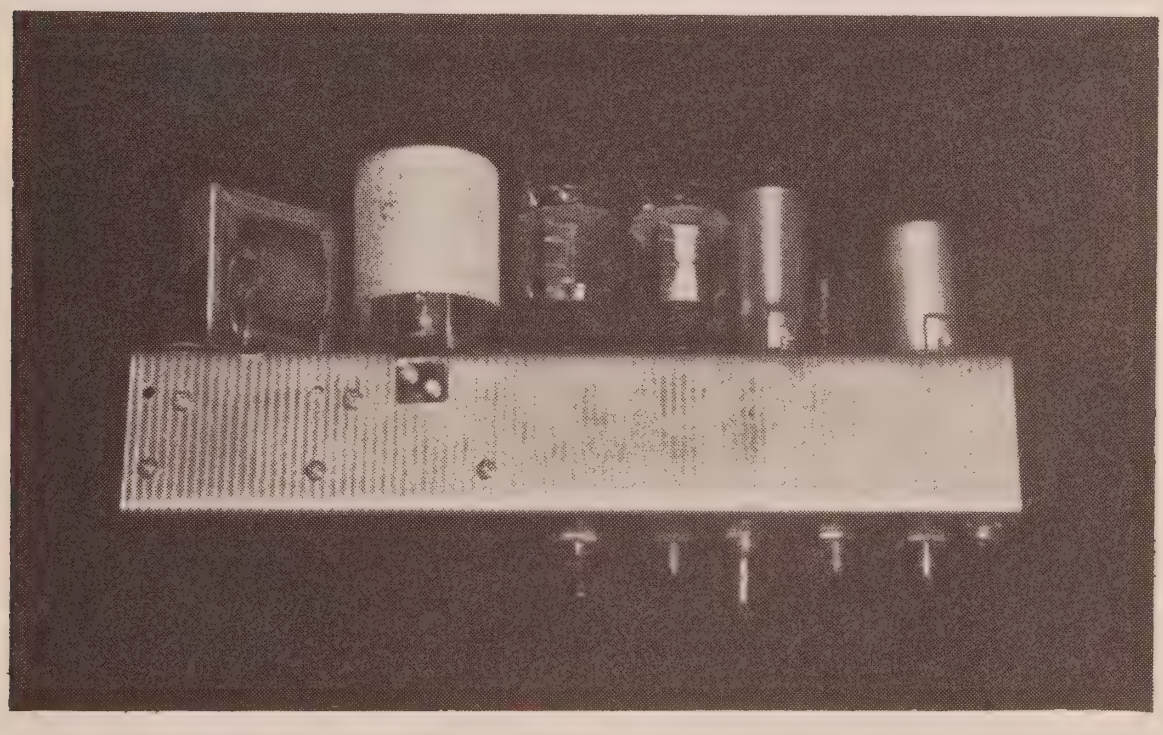

Fig. 4.14—Screen grid modulator using parallel 6Y6's in the output. Components are, from left to right: filament transformer, 1h. choke for 6Y6 low pass filter, 2-6Y6's, 12BY7, interstage transformer and 12AX7 input. Panel controls are, from left to right: CARRIER OUTPUT LEVEL, CLIPPER LEVEL ADJUST, C.W.-PHONE switch, CLIPPER OUTPUT, INPUT LEVEL control and microphone input jack.

in power input from 50 to 500 watts when adjusted for voice operation and twice these values for c.w. operation. These transmitters use one or two 4X150 or 4CX250B tetrodes which are screen grid modulated for voice operation. The modulator is versatile enough to work with all transmitters without any change except for resetting the output gain control.

The modulator illustrated in figs. 4.14 and 15 is built to fit into a small space, therefore uses a 2 × 2 × 12 inch chassis. It should have been at least 2 inches wider since the parts are stacked in too closely for servicing in the event of parts failure.

Basically the circuit consists of a dual triode speech amplifier, a 12AX7, connected to a pair of crystal diodes biased for speech clipping, and the modulator with its driver tube. The modulator consists of two 6Y6GB tubes connected as cathode followers in parallel. The plates connect to a 500 to 550 volt power supply and the cathodes connect, through a low pass audio filter, to the screen grids of the Class C r.f. amplifier. The modulator screen grids are driven by another small power amplifier, a 12BY7 also connected as a cathode follower but with different grid connections. The 12BY7 is used as a triode with the screen and plate tied together and its control grid driven by an ordinary step-up interstage audio transformer. With the connections shown in fig. 4.16, the 12BY7 draws no grid current and only requires a few volts of audio from the transformer to drive the screen grids of the parallel 6Y6GB modulator tubes. The control grids of the 6Y6GB tubes are tied to the cathodes and the screen grid positive bias voltage is set by the voltage drop across the 12BY7 driver tube. This voltage drop is adjusted to any value which gives about 250 volts down to less than 100 at the screen grids of the r.f. tubes. A potentiometer circuit across the 500 volt power supply, in series with the clipper bias control and a 130,000 ohm 2 watt resistor is

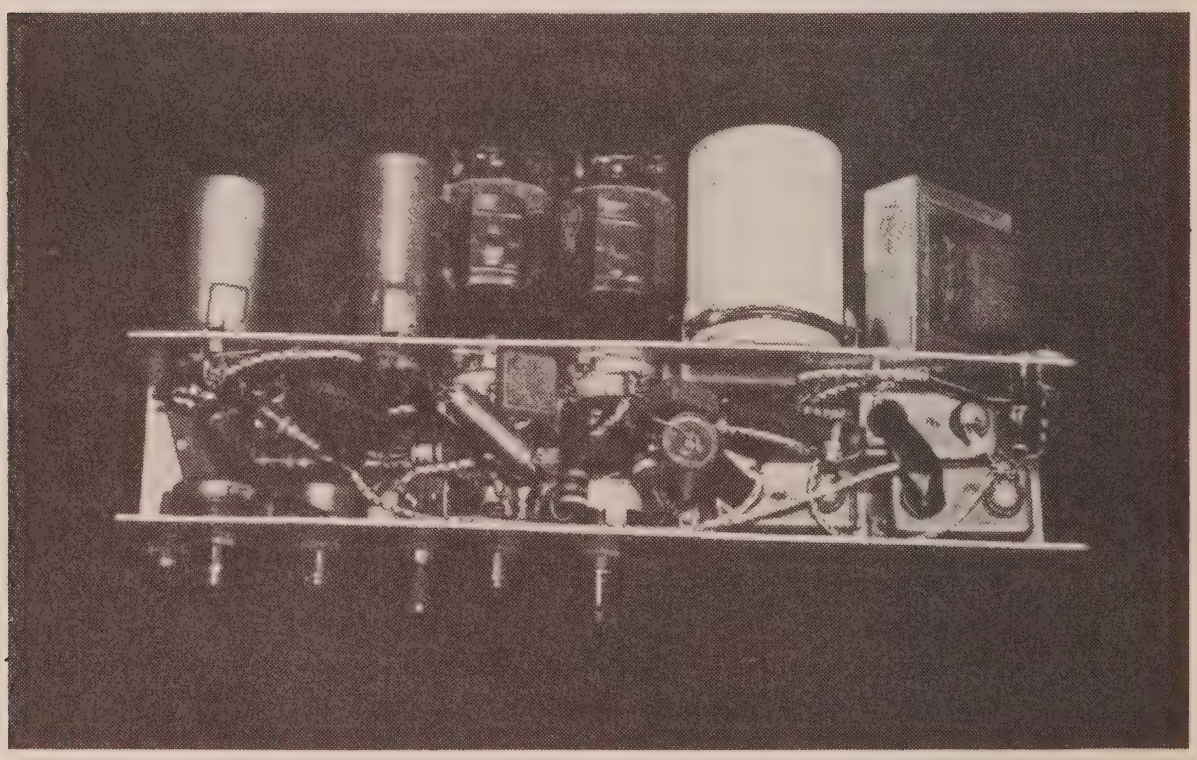

Fig. 4.15—Compact screen grid modulator. A larger chassis should be employed if space permits.

used for this purpose. A s.p.d.t. switch in the control grid circuit of the 12BY7 tube connects the grid to the a.f. transformer and back to the d.c. bias circuit through an R C network, or directly to the bias potentiometer for c.w. operation. The 12BY7 and 6Y6GB tubes are used for screen grid power supply for c.w. as well as for voice modulation. For high speed c.w. work it might be desirable to switch out the low-pass audio filter but at ordinary keying speeds the 20 or 30 ma change of current through the filter choke seems to have little effect.

This modulator has a very high peak current output characteristic with its curvature more or less equal and opposite to the screen grid characteristic of 4X150A or 4CX250B tubes. This type of modulator gives a very high average level of modulation of better sounding quality than can be obtained by a transformer coupled modulator of the types normally used for screen grid modulation or for small plate modulated transmitters. A single 6Y6GB or 6W6GT modulator tube should function with lower powered transmitters using tubes such as an 829B with a 400 to 500 volt supply to the audio tubes. In any screen grid modulated system, a high d.c. plate voltage should be used on the modulated r.f. tubes, at least as much as would be used for c.w. operation.

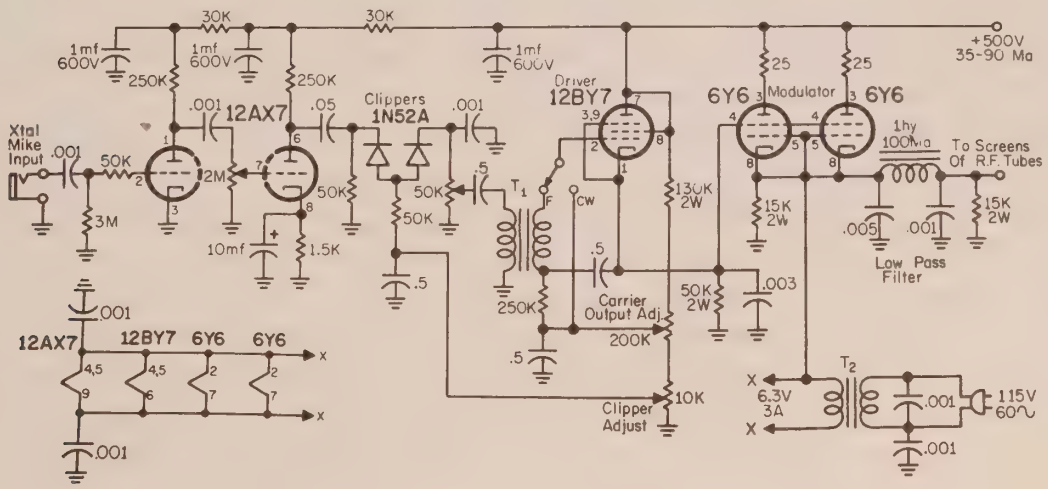

Fig. 4.16—A versatile screen grid modulator that includes a diode speech clipper, carrier output control and a low pass filter.

T_1—Interstage transformer, 1:2½.
T_2—6.3 volts, 3 amperes.

4.6 Frequency Modulator

Narrow band frequency modulation of a few kilocycles may offer some attractive features for VHF and UHF amateur communication. In the 50, 144, and 220 mc bands, the use of n.b.f.m. usually eliminates television interference problems. Fairly effective results are obtained even with slope detection in an ordinary communication receiver unless the n.b.f.m. signals are quite weak or noise conditions are severe. If the receiver is equipped with some form of n.b.f.m. adaptor or built-in f.m. detector, very good results may be obtained even with weak signals. Tests in the 432 mc band indicate that weak f.m. signals with 5 to 15 kc swing, or deviation, may often be more

usable than a.m. signals when the receivers are equipped with both types of detection schemes. The savings in power modulator costs and simplification of r.f. stage adjustments are very attractive for any of these bands, particularly at 432 or 1296 mc where grounded grid stages may be used. Grounded grid stages are difficult to amplitude modulate unless sufficient a.f. power is available to modulate the power tripler stage as well as the usual final amplifier stage. For good quality, these stages must be correctly adjusted for Class C operation, which may not be accomplished easily in many transmitters.

Frequency modulation has an advantage at this point since the r.f. stages can be Class A, B or C. The modulation takes place in the oscillator tube at very low power. Phase modulation with its proper a.f. slope filter to provide an equivalent signal to pure frequency modulation is often used since it does not produce frequency changes that may be problems at VHF where small changes are multiplied many times. Frequency drift of nearly all v.f.o. units, (variable frequency oscillators), usually means that direct frequency modulation may be a problem as compared to crystal controlled oscillators which may be phase modulated. However, phase modulation generally does not give as good quality and many amateurs prefer direct frequency modulation. The latter is no problem if a good v.f.o. is used at a lower frequency such as around 3 or 4 mc and heterodyned up to 48 or 50 mc. Additional heterodyning or frequency multiplication may then be used for higher frequency bands. A good v.f.o. can be multiplied in frequency by 9 or 12 times before frequency drift or erratic operation becomes a problem. Heterodyning eliminates frequency instability troubles which are present when attempting to multiply 18 times or more. However, the added frequency components have to be filtered out with additional tuned circuits so as to select only the one desired heterodyne frequency.

This principle of operation was applied to a permeability tuned Collins v.f.o. in the 1 to 1.5 mc range which was then heterodyned and also frequency multiplied to use in the VHF bands. The very simple frequency modulator shown in fig. 17 was then connected directly to the grid of the 12SJ7 or 6SJ7 v.f.o. tube through a 10 mmf zero-temperature coefficient capacitor. The capacity can be changed to smaller values to reduce the amount of f.m. or the d.c. bias voltage may be increased on the "Semicap." This is a high Q variable capacitor diode with a very low temperature coefficient. A change

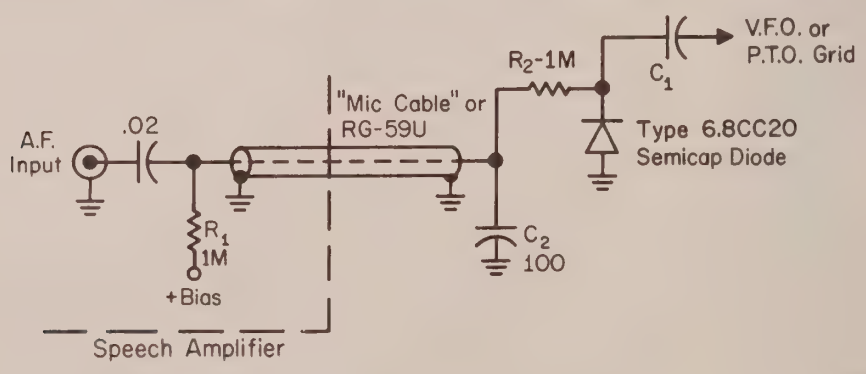

Fig. 4.17—A compact frequency modulator that may be used for narrow band f.m. With a bias of +4 volts the audio peak input may be approximately 1 volt. With a bias of +8 volts the peak a.f. may be 2 to 3 volts. Capacitor C_1 is from 3 to 30 mmf depending on the L/C ratio of the v.f.o. and operating frequency.

of reverse bias on this diode causes a change of capacity, so if a small a.f. voltage is applied in the diode circuit, frequency modulation will result in the v.f.o. The amount of deviation or frequency change in the oscillator will not be affected by heterodyning, but each time the frequency is doubled or tripled, the deviation will be increased by a similar amount. This simple frequency modulator only requiring a diode, two resistors and two fixed capacitors, replaced a phase modulator using a high conductance tetrode tube with many more capacitors and resistors.

The type 6.8SC20 "Semicap" used in fig. 4.17 produced good quality voice signals when the Collins v.f.o. was multiplied by at least 6 times and heterodyned also. Tests were made with 9 volts of reverse bias and 3 to 4 volts peak a.f. and also with 4 volts bias and 1 to 1½ volts of a.f. The linear modulating range of the diode is better with higher bias but the variation of capacity is reduced for a given value of a.f. voltage. For example, at 4 volts bias across an r.f. circuit where the r.f. peak voltage is about 1 or 2 volts, 1 volt of a.f. will cause a capacity change of around 1 mmf above and below the "zero" value of 10 mmf. At 9 volts bias, more than twice as much a.f. voltage is required. A vacuum tube voltmeter should be used to check the peak r.f. voltage of the circuit being modulated to be sure the actual peak voltage plus audio voltage is less than the d.c. bias value. The diode series capacitor isolates the d.c. bias circuit from the v.f.o. and also may be used to reduce peak r.f. voltages to values of one half or less across the diode.

As long as the total voltage across the diode does not swing to or beyond zero volts, the diode load impedance is extremely high and it does not appreciably lower the Q of the v.f.o. circuit. This impedance is high enough so .5 or 1 megohm resistors may be used in place of radio frequency chokes to feed both d.c. bias and a.f. voltage to the diode. The r.f. bypass capacitor in fig. 4.17 should not be over 100 mmf in order not to bypass high audio frequencies to ground. The resistor, (R_2) shown as one megohm may be less when using this modulator with most v.f.o. systems. A top limit of 1 megohm may be used as a design value.

4.7 A Transistorized Speech Amplifier

The modest a.f. voltage requirements of the diode frequency modulator in the previous section, permits a simple two stage transistor speech amplifier to be used to drive it. The circuit and illustration, figs. 4.18 and 19

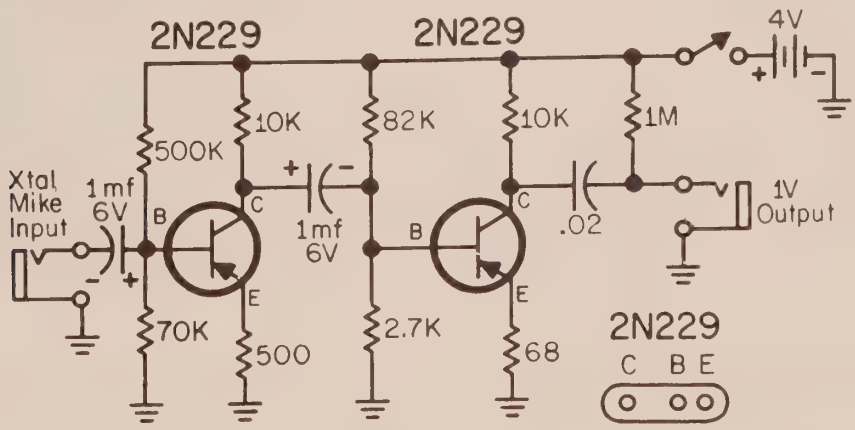

Fig. 4.18—Transistorized speech amplifier suitable for driving the n.b.f. modulator shown in fig. 4.17. The battery supply may be used for the diode bias in the modulator.

show the simplicity and compactness of this unit. It was built complete with 4 volt mercury battery in a 3 × 4 × 1 inch aluminum chassis with cover. Even a smaller size would be satisfactory. The type 2N229 transistors are of very low cost and function quite well in this type of work. They are type NPN transistors which means that the battery polarity is positive towards the collectors and base connections. The same 4 volt battery furnishes bias (through a shunt one megohm resistor on the output jack) to the frequency modulator diode. The insulation in the shielded lead, a foot or so in length, must be good in order to not short out this bias voltage. The speech amplifier will put out a maximum of 1½ volts of peak a.f. for close talking into a crystal microphone with some speech limiting. The latter is desirable in f.m. in order to have the average speech level as high and uniform as possible within limits of usable speech quality.

This transistor speech amplifier may be used as a pre-amplifier with an added amplifier in any a.m. system. Being transformerless and operated from a self contained battery, hum and r.f. feedback problems are at a minimum. If more than about one volt of audio is needed a change can be made to a 9 volt battery with a possible change in the base resistor values. A small audio frequency choke of a few henrys inductance substituted for the 10,000 ohm collector resistor in the second stage in fig. 4.18 will nearly double the maximum a.f. voltage output for a given battery voltage since the d.c. voltage at the collector will be nearly doubled. The input transistor operates at about 25 per cent of the gain of the second stage in order to raise the input resistance from around 1000 ohms up to about 25,000 for connection to a crystal microphone. This is the result of using a fairly large value, 500 ohms, of emitter bias resistor without an a.f. bypass capacitor. Some types of crystal handmikes will function into a 25,000 ohm load

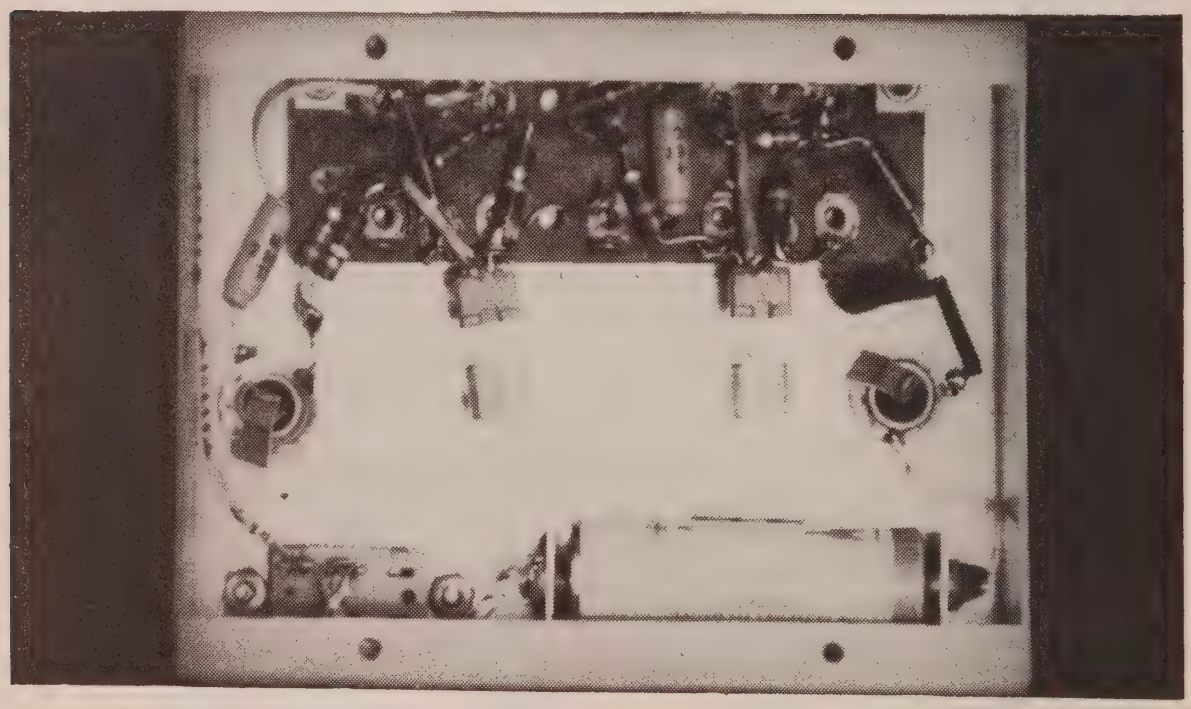

Fig. 4.19—The amplifier is wired on an insulated terminal board raised from the chassis. The two-2N229's may be seen inserted in the sockets. Microphone input jack is on the right and output jack is on the left. The ON-OFF switch is lower left and the battery holder is to the right.

without too much loss of microphone output voltage in close-talking service. This two stage amplifier does not have enough gain or output voltage for connection to loads lower in impedance than the grid circuit of a tube, or the special diode frequency modulator discussed in Section 4.6.

4.8 Phase Modulator

The circuit of fig. 4.20 is a bridged-T type phase modulator developed by Dr. Pawley. The components are chosen for use in the 8 mc region for connection in the link circuit between an 8+mc crystal oscillator and the following tuned grid circuit of the first frequency multiplier. A few volts of audio from a 500 ohm output speech amplifier will vary the resistance of the two type 1N90 crystal diodes and produce a phase shift of r.f. through the network. The phase shift in the 8 mc region may be increased to wider "frequency" swing by frequency multipliers such as would be used in any VHF transmitter. Two requirements must be met; first, enough crystal oscillator output must be available to drive the next stage through the network loss, and second, the link circuit should look like a 50 ohm resistor into and out of the network within reasonable limits.

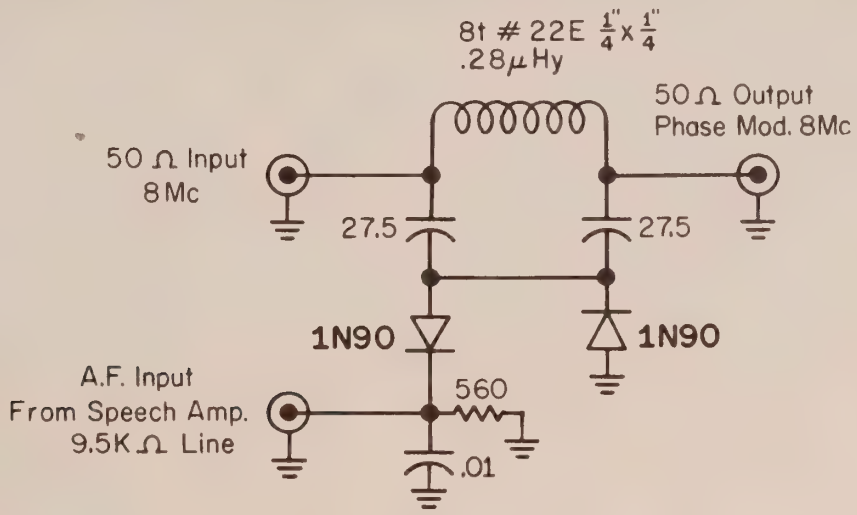

Fig. 4.20—Circuit of bridge T phase modulator that may be inserted in the link coupling between the output of an 8 mc crystal oscillator and the first multiplier.

This phase modulator is more compact than tube type units and can be built into a copper or aluminum box about 1½ inches on each side with phono-pin jacks for connections as shown in the illustration of fig. 4.21. This illustration also includes the simple frequency modulator of Section 4.6. Reference to regular radio handbooks can be made for circuit diagrams of tube type phase modulators.

4.9 Vacuum Tube Keyer For C.W.

C.w. is a form of modulation in which the transmitter carrier is turned on and off in a sequence of coded dots and dashes. Like any other modulation system, spurious signals should be eliminated which would fall outside of the minimum bandwidth required for communication. A vacuum tube keyer is one very effective and simple means of reducing key clicks provided the R C constants are properly chosen in the grid circuit of the keyer tube and not

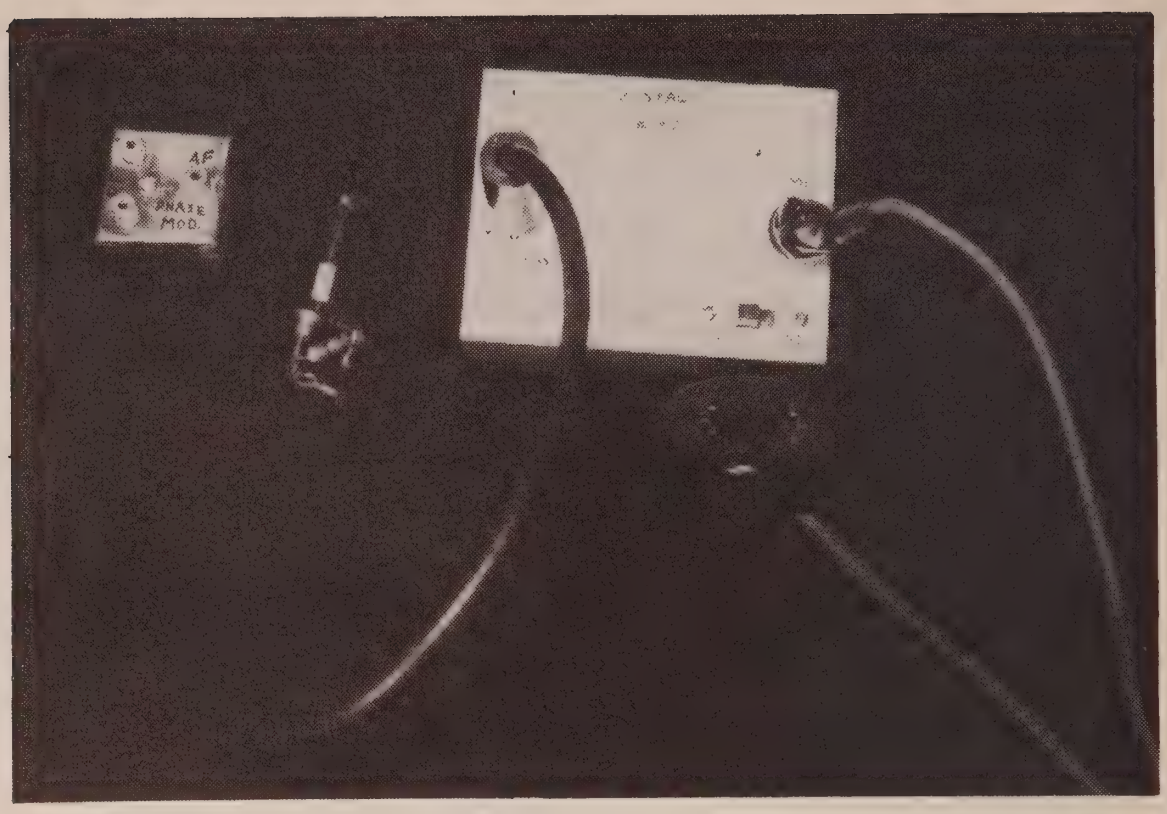

Fig. 4.21—View of the transistorized amplifier (right), n.b.f. modulator on the end of the output cable and the simple phase modulator of fig. 4.20 on the left.

too many r.f. or frequency multiplier stages are used after the keyed stage. By plugging the keyer into the second or third multiplier cathode circuit, the latter difficulty is minimized.

One fault of some vacuum tube keyers is the loss of r.f. drive due to added bias introduced in the keyed cathode circuit. The voltage drop across the keyer tube or tubes usually is from 50 to 100 volts. In order to avoid this, the screen grid of the keyer tube can be connected to a fixed voltage supply and the voltage drop then is only 10 to 25 volts. The screen current is high and either a series resistor to limit the maximum screen dissipation, or a fixed lower voltage supply may be used. The circuit of fig. 4.22 and

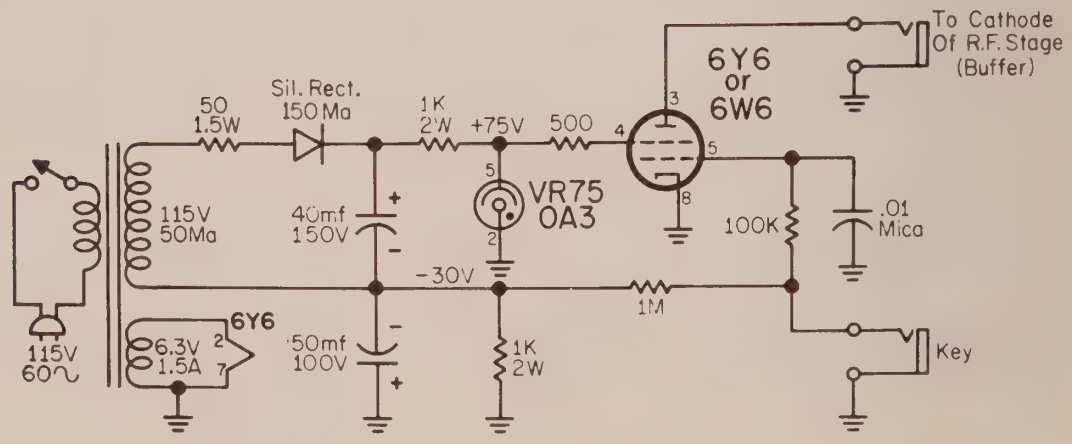

Fig. 4.22—A vacuum tube keyer for stages whose cathode currents do not exceed 50 ma.

illustration in fig. 4.23 shows a unit being used in VHF service where it is usually plugged into the second frequency doubler or tripler cathode circuit. It will function for cathode current values of up to 50 milliamperes in the r.f. stage being keyed.

The unit was built into a 4 × 3 × 5 inch box with a small selenium or silicon rectifier and transformer for both negative bias voltage and regulated screen voltage supply. A type 6W6GT or 6Y6GT or 6AS5 will function in this circuit since the keyer tube should operate with either a VR75 (0A3) or VR90 tube screen supply of 75 or 90 volts respectively. The regulator tube should pull 25 to 30 ma with key up and about 15 ma less than that with key down, since the keyer screen current goes from cut-off or zero up to about 15 ma. The silicon rectifier in the 115 volt transformer secondary circuit is connected, through an *R C* filter, to the VR75 tube and the negative bias resistor in series with the ground connection as shown in fig. 4.22. A

Fig. 4.23—Top view of keyer showing the power transformer in the rear with the 6Y6 on the left and the VR tube to the right.

voltage, from 25 to 30 volts, negative polarity, is available for connection to the *R C* delay circuits and key in the grid circuit. The .01 mf, mica capacitor, and 0.1 and 1 megohm resistors can be varied to produce any degree of "softness" or clicks desired by the operator. Larger values mean slower keying speeds must be used than would be desirable for "meteor shower" contacts. This keyer was substituted for one using several triodes in parallel and resulted in less grid driving loss than in the bulkier unit, along with a saving in cost of parts.

W6AJF's favorite modulator for meteor scatter contact. "Now use your left foot-".

5

Power Supplies

PLATE voltage power supplies for VHF transmitters are similar to those used at lower frequencies with the exception that exciter supplies must be able to supply more current. The VHF exciters have more frequency multipliers so require more plate and heater current from the power supplies. The ratio is about two to one; for example, a 250 or 300 volt supply of 100 ma for a 7 mc exciter would have a similar supply circuit diagram but heavy duty chokes and transformer for 144 or 220 mc with perhaps a 200 ma rating. High power final amplifiers in the VHF bands are more likely to be rated at 2000 volts and 500 ma than 3000 volts at 333 ma for 1 kw inputs to the r.f. stage. A typical high voltage power supply is shown in fig. 5.1. The theory and operation has been thoroughly covered in all large radio handbooks.

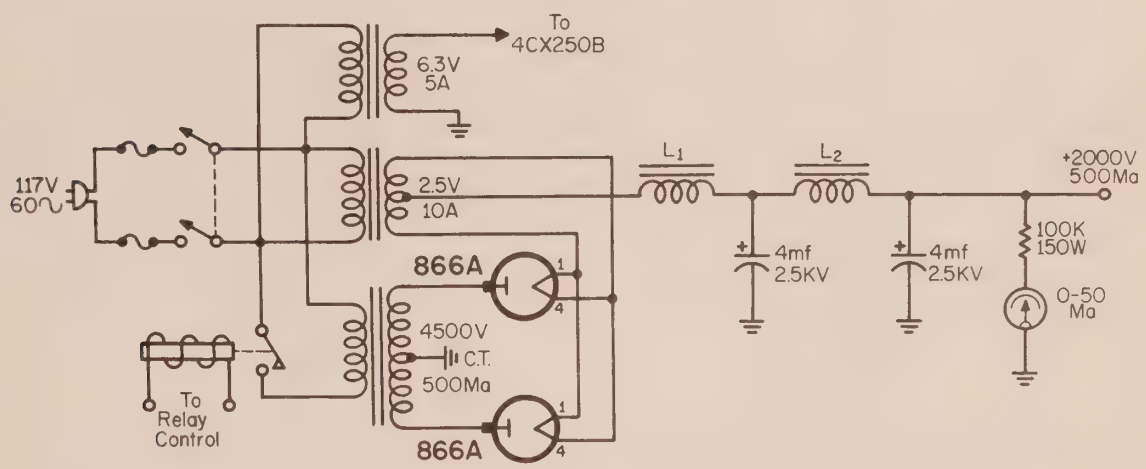

Fig. 5.1—High voltage power supply capable of handling two 4CX250B's.

L_1—Swinging choke, 3-12h 500 ma.
L_2—Filter choke, 8h 500 ma.

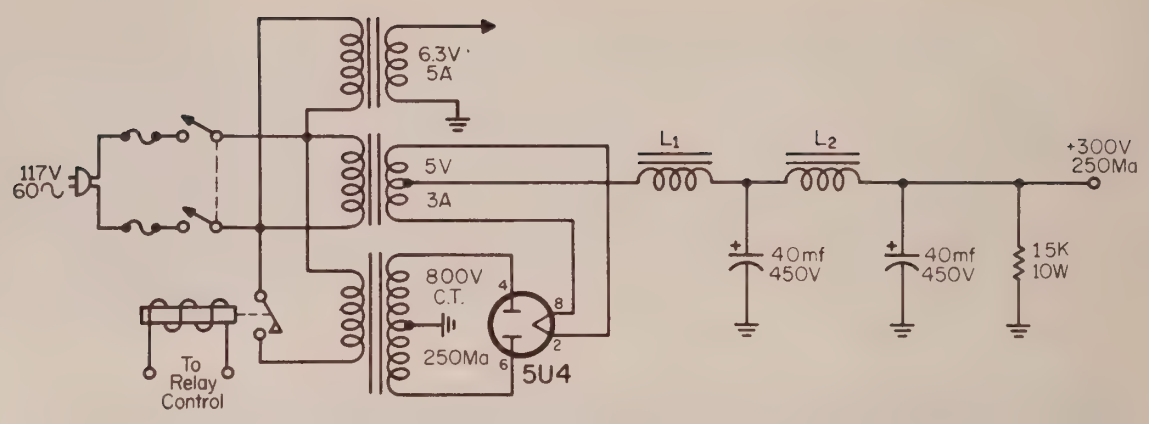

Fig. 5.2—Typical exciter power supply.

L_1, L_2—Filter chokes, 6h or more, 250 ma.

5.1 Small Power Supplies

Similarly the power supplies for the exciters such as the one in fig. 5.2 have been described. Often a voltage regulated power supply is needed such as the one illustrated in figs. 5.3 and 4. The power triodes such as type 45s or 2A3's in parallel may be used if the power transformer has both 6.3 and 2.5 volt heater windings. More suitable 6.3 volt power amplifiers, triode connected, may be used if the transformer happens to have two 6.3 volt windings. These tubes are seldom operated with a load current through them of more than 50 ma per tube. Parallel connection permits heavier load currents within the range of regulated voltage output.

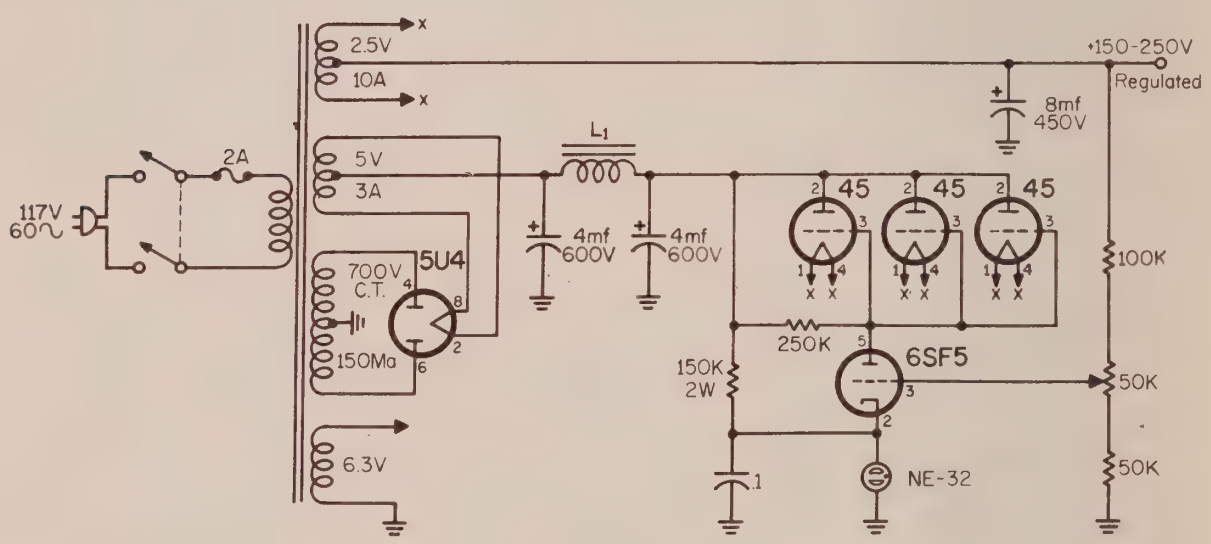

Fig. 5.3—Circuit of a general purpose voltage regulated power supply. The regulator tubes, $V_{3, 4, 5}$, may be replaced with 6.3 volt power amplifiers such as 6L6, 6A3, 6AQ5 etc., as explained in the text. The 50K control in the grid of the 6SF5 adjusts the output voltage.

L_1—Filter choke 12h. 150 ma.

Fig. 5.4—Regulated power supply. Three tubes along the rear of the chassis are $V_{3,\ 4}$ and $_{5}$, the regulators. To the right of the regulators and behind the 6SF5, is the 1 watt neon regulator for the 6SF5. The voltage output control may be seen between the filter choke and the output terminal strip.

5.2 Metallic Rectifiers

Sometimes selenium or silicon 115 volt (400 PIV) rectifiers are used in voltage doublers, triplers or even quadruplers. The voltage regulation of a silicon rectifier power supply is better than a tube receiver since there is

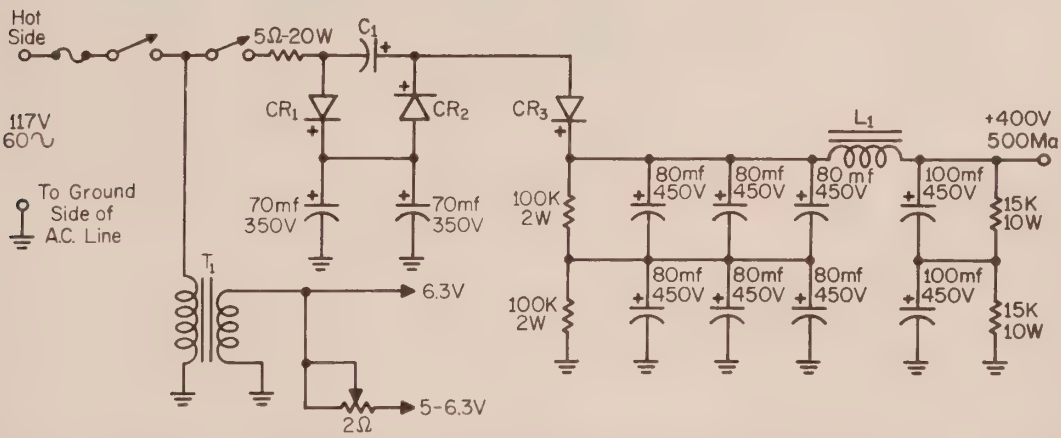

Fig. 5.5—Voltage tripler power supply provides 400 volts at 500 ma. Care must be taken to see that the ground side of the a.c. line is always connected to the chassis ground.

C_1—150 mf 450 v. Six 24 mf 450v capacitors in parallel.
L_1—Filter choke 1H, 500 ma.
T_1—Filament transformer 6.3v, 10a.
$CR_{1,\ 2,\ 3}$—500 ma silicon rectifiers (400 p.i.v.)

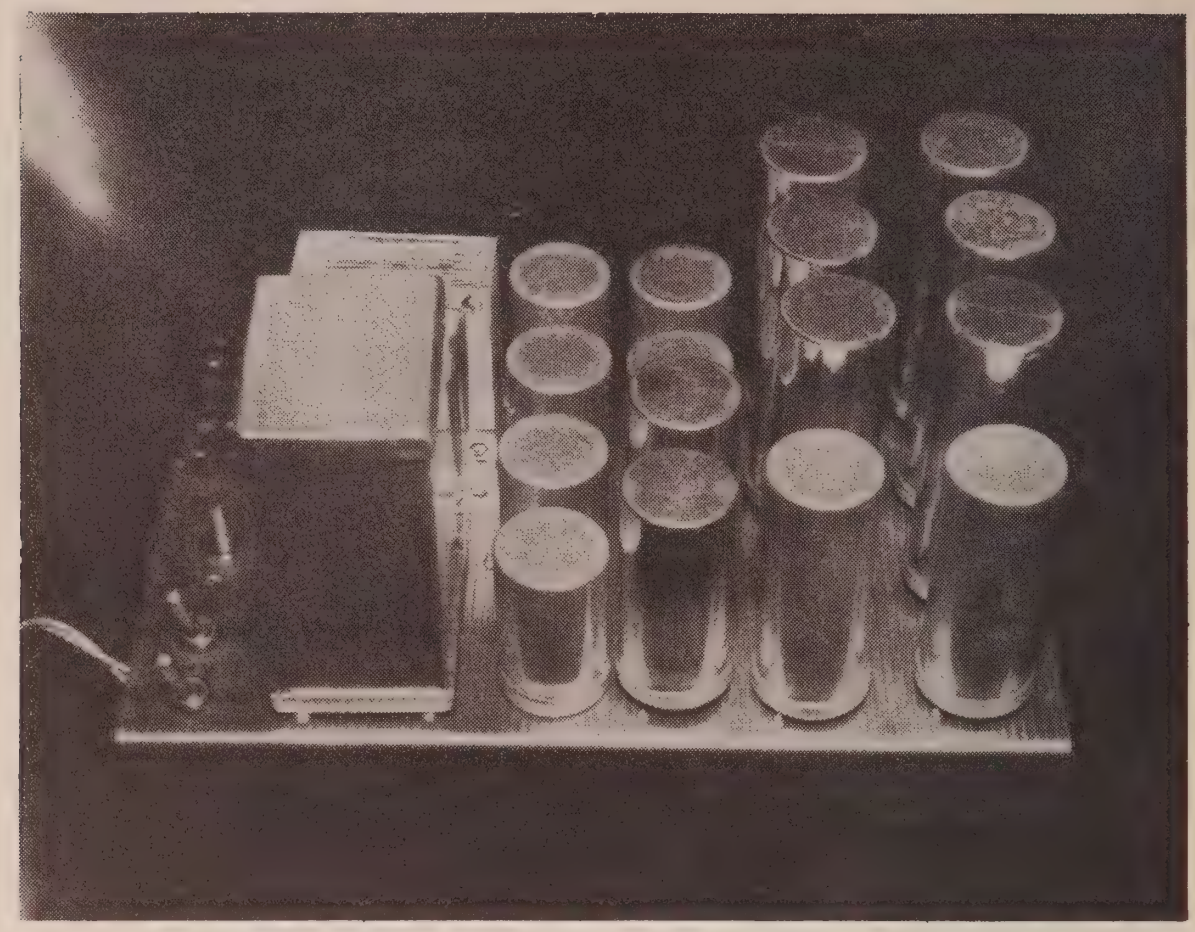

Fig. 5.6—Top view of the voltage tripler. If the can is the negative terminal of the capacitor it must be insulated from ground and the metal housing must be covered with suitable insulating material to eliminate shock hazard.

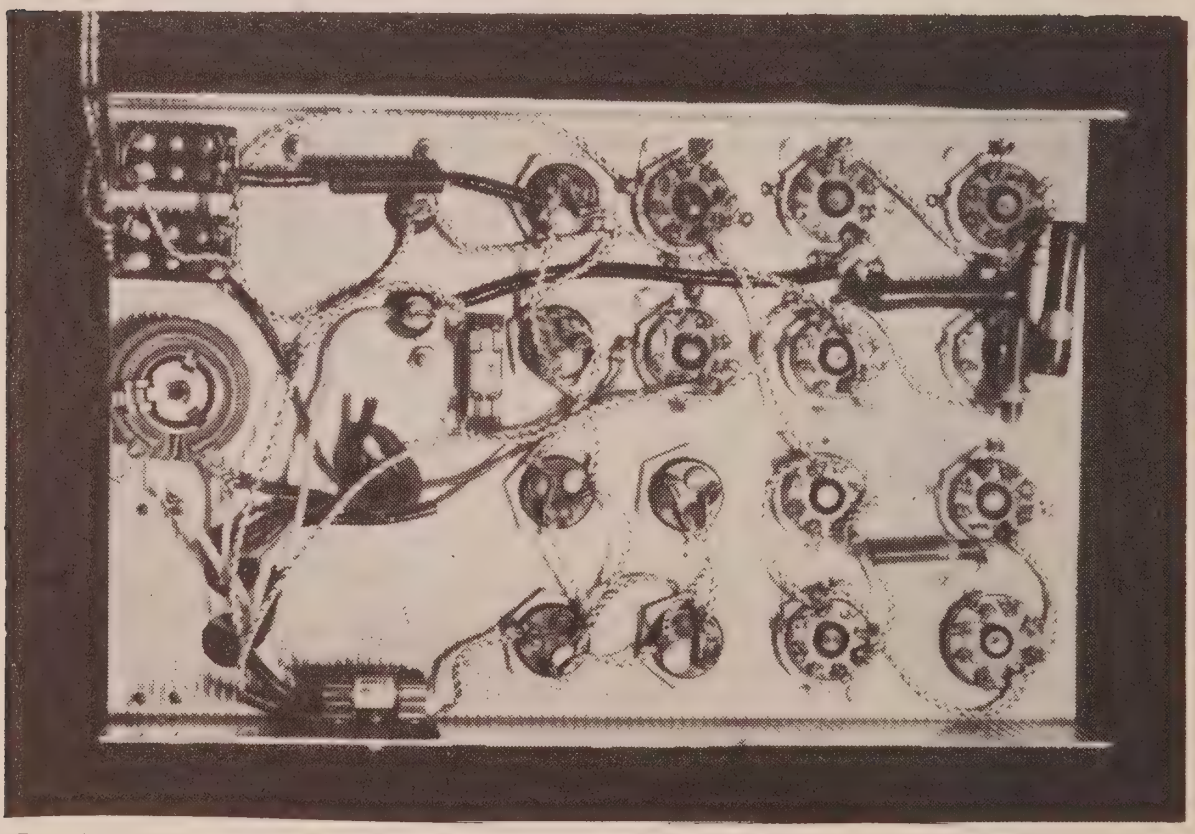

Fig. 5.7—Bottom view shows extreme simplicity of the wiring. One silicon rectifier is located on the bottom chassis flange and the other is to the right of the filament pot. Note the use of a capacitor housing whose case is not the negative terminal.

very little voltage drop across the rectifier. However, for good regulation at heavy load currents, very large values of filter capacitance are necessary. A good example of a voltage tripler with lots of capacitance is shown in figs. 5.5, 6, and 7 in which three 500 ma silicon rectifiers are used to provide about 400 volts output at 400 to 500 ma. If the load current is less, for example 200 ma, all of the capacitors could be halved. The power supply of fig. 5.5 was designed for a VHF transmitter with a 75 watt final amplifier with its plate modulator and exciter stages all connected to the one 400 volt supply.

5.3 Voltage Doublers

Voltage doubler power supplies of the general form shown in figs. 5.8 and 9 are often used where 250 volts at load currents of 150 to 200 ma are needed. When silicon rectifiers are substituted for selenium rectifiers higher output voltages are had with less heat and power loss in each rectifier. With silicon rectifiers the series filter capacitors often overheat unless the protective series resistor is about 5 or 10 ohms greater than the values used with selenium rectifiers. In either case these series capacitors pass 60 cycle current

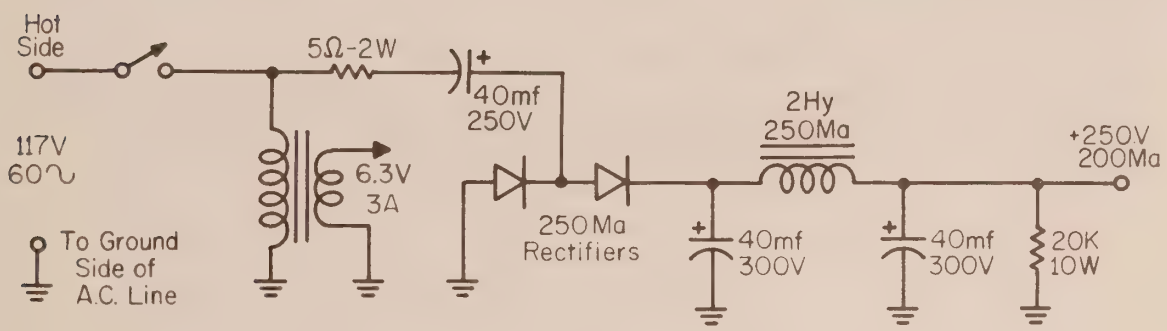

Fig. 5.8—Simple half wave voltage doubler. (See fig. 5.9) Selenium or silicon rectifiers may be used. Be sure the ground side of the a.c. line is always connected to the power supply chassis to prevent shock hazard.

which will tend to overheat the usual polarized electrolytic capacitor unless it has been designed for use in voltage doubler circuits. Parallel operation of several capacitors, each of lower capacity, placed in an area with good air cooling, will always be worthwhile in these rectifier supplies. This general type of power supply should be used with polarized a.c. line plugs so the grounded side of the a.c. line always connects to the power supply chassis ground. An alternative is the use of an isolation line transformer with sufficient rating to handle the power supply requirements.

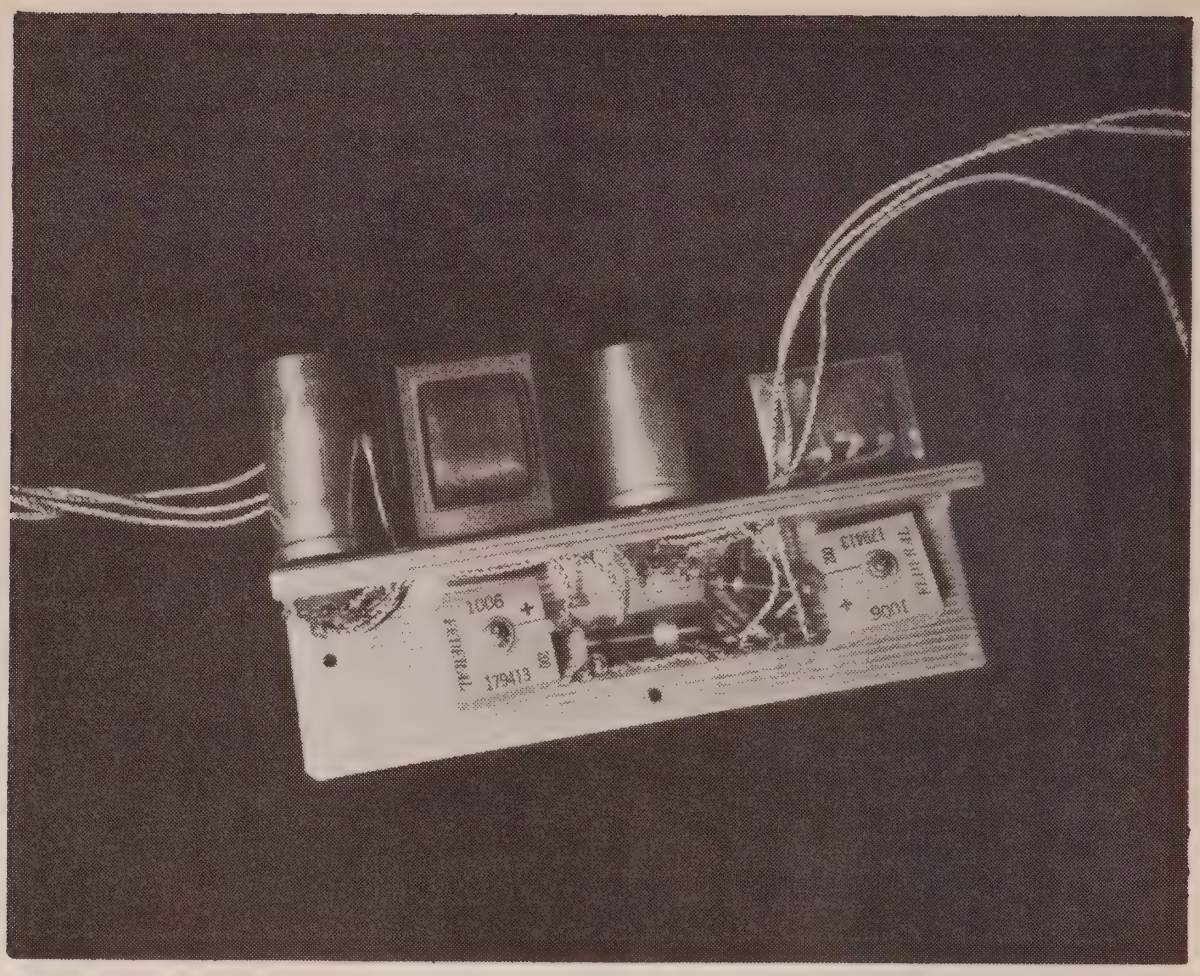

Fig. 5.9—Compact voltage doubler whose circuit is shown in fig. 5.8. Note use of plug-in filter capacitors whose cases are not connected to the B— terminal. If conventional capacitors are used the metal cases should be insulated from the chassis and covered to prevent shock hazard.

6

Converters

RADIO receivers for the VHF bands are usually a combination of a good communications high frequency receiver and a crystal controlled converter for each VHF band. This applies particularly to fixed station receiving equipment where weight and space requirements are not an important factor as they would be in mobile station equipment. The communication receivers usually have a wide band tuning section of several megacycles in one of their coil switching ranges which is suitable for a tunable i.f. system. Lower values such as 5 to 9 mc offer better frequency stability in some receivers but at a sacrifice in image rejection in the converter. Poor image rejection means spurious and undesired signals apparently in the amateur bands in most locations. On the other hand, tunable i.f. systems in the 30 or even 50 mc region offer fine image rejection possibilities but the frequency stability may be objectionable. The choice of i.f. tuning range is usually dictated by the characteristics of the communications receiver available at the amateur station.

All of the converters described in this chapter were built with the 14 to 18 mc region as the choice for tuning the VHF bands. If another range is desired, two changes would be necessary. The crystal frequency would change and the oscillator plate coil or capacitor would have to tune to the new crystal frequency, and any frequency multipliers would also have to tune to the proper frequency. The second change would be in the mixer output circuit which is a broadband circuit covering the chosen i.f. range only.

6.1 50 MC Converter

The 50 to 54 mc signals are converted to the 14 to 18 mc band by means of an overtone crystal oscillator at 36 mc and a triode mixer. In order to reduce image signal response, at least one stage of r.f. amplification is needed. Two stages result in far better characteristics, both for image rejection and noise figure, but in some locations the problem of cross-modulation arises. This may take place because of a nearby channel 2 television transmitter or 50 mc amateur stations within line of sight locations. This problem can be solved by inserting a gain control in the r.f. stages. Thus, local signals, close to the desired frequency but with the much greater amplitude that normally produces cross-modulation, can be attenuated. Cross-modulation normally can be recognized by hearing the modulation of one or more strong signals riding in on the carrier of the desired signal. Besides control of the r.f. stage gain, a linear type of mixer helps a great deal. Grounded grid r.f. stages seem to be less subject to cross-modulation than neutralized triode, pentode, or cascode r.f. amplifiers. A cascode r.f. stage of the types shown in fig. 6.3 are reasonably

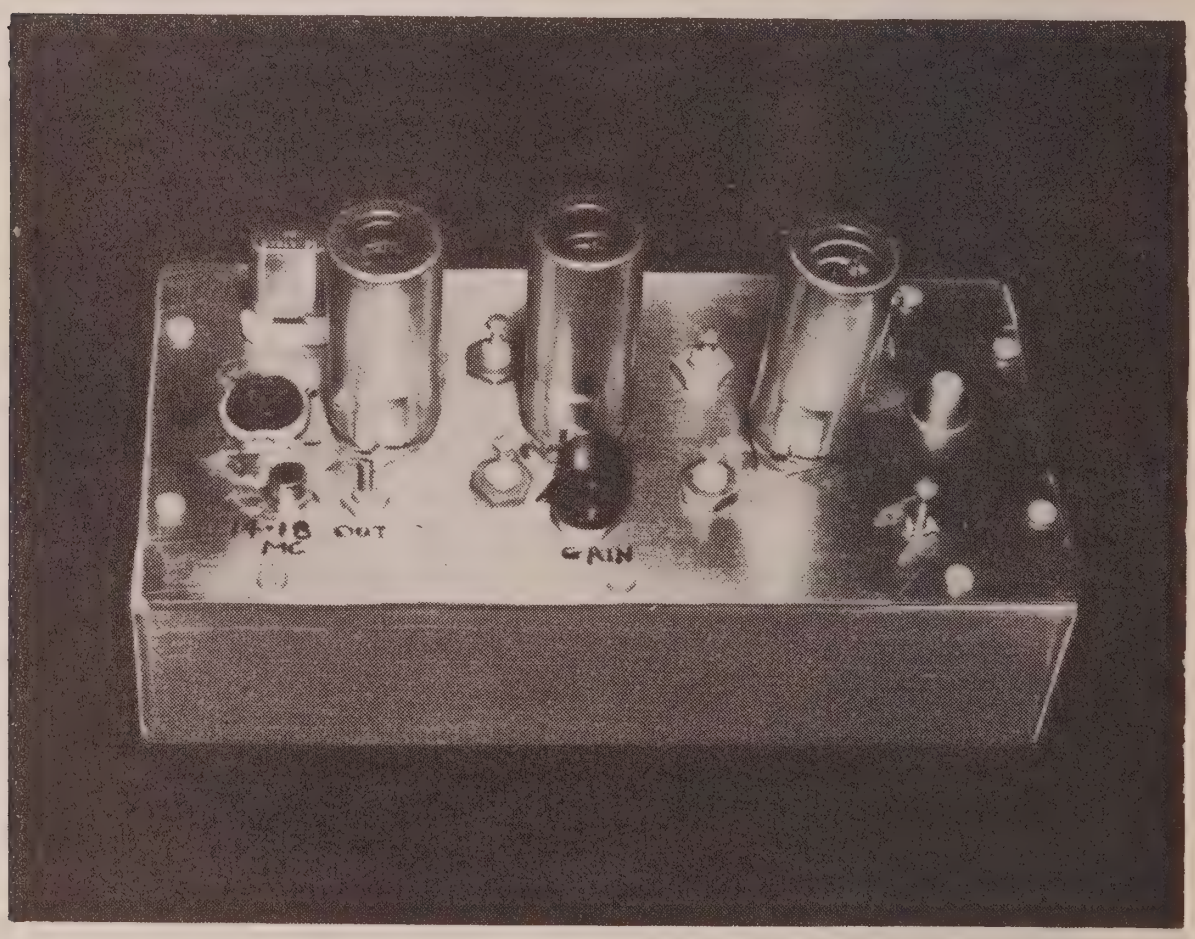

Fig. 6.1—A 50 mc converter with a 14 to 18 mc output. All tubes are 6BQ7's. The crystal is in the rear left corner and the input connector is on the right center. Below it is the capacitor that tunes L_1 and behind the 6BQ7 r.f. amplifier is the adjustment screw for tuning L_2. Between V_1 and V_2 are L_4, top and L_5 bottom. Between V_2 and V_3 are L_6 rear and L_7 front. Oscillator plate tuning is not visible but is behind V_3. Output tuning, L_8, is in front of V_3.

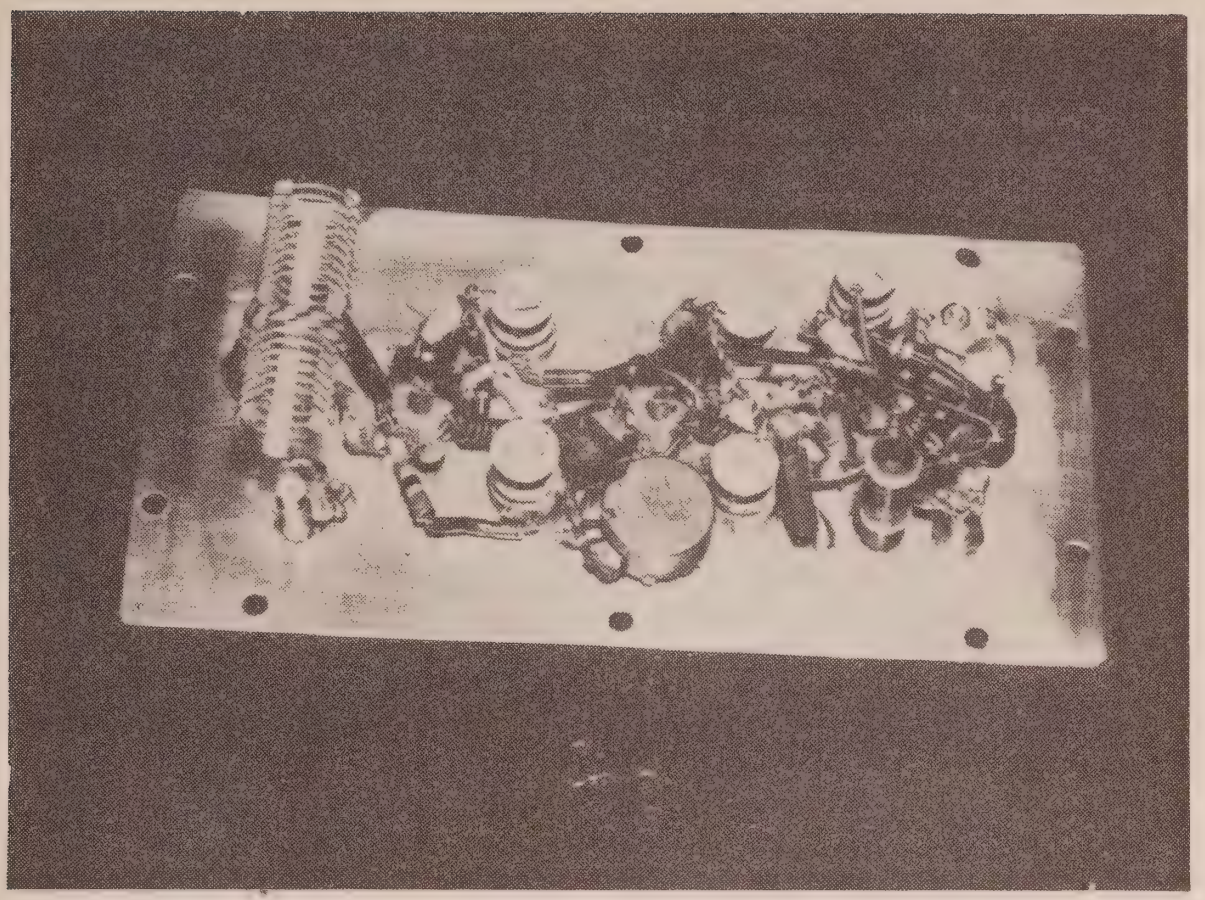

Fig. 6.2—The high Q input circuit, L_1, L_2, and L_3 may be seen on the left. The piston tuning capacitor for L_2 and the input connector cannot be seen as they are located under the coils. The gimmick coupling capacitors may be seen between the upper and lower coils.

free of cross-modulation except in extreme cases. A very high Q circuit such as a coaxial tank circuit ahead of the converter is often used to eliminate cross-talk from channel 2 high powered TV stations. The method used in this converter is also very effective and takes much less space than a large coaxial tank circuit. It consists of two high Q coil circuits ahead of the first r.f. tube. By the same token, image rejection is greatly improved.

The nf (noise figure) of the converter shown in figs. 6.1, 2 and 3 was measured at approximately 4 db, low enough in most locations for DX reception. Even in good locations the external noise level will mask out this tube or front end noise of 4 db. In exceptional locations of low noise, a lower nf might be desirable, or if the 50 mc converter is connected to a 432 or 1296 mc converter (or even higher bands) as its first i.f. system. For example, on 1296 mc or higher, a crystal diode mixer without an r.f. amplifier, needs a very low i.f. amplifier nf to work properly. In this case the first i.f. stage of 50 mc or otherwise, should have a noise figure of less than 2 db when possible.

The image frequency rejection of this 50 mc converter was measured at over 100 db and other spurious responses were down from 75 to 85 db with gain control at maximum gain, the least favorable setting. A quarter of one microvolt tone modulated signal was readable through the complete receiver system but pretty well down in the receiver noise or hiss level.

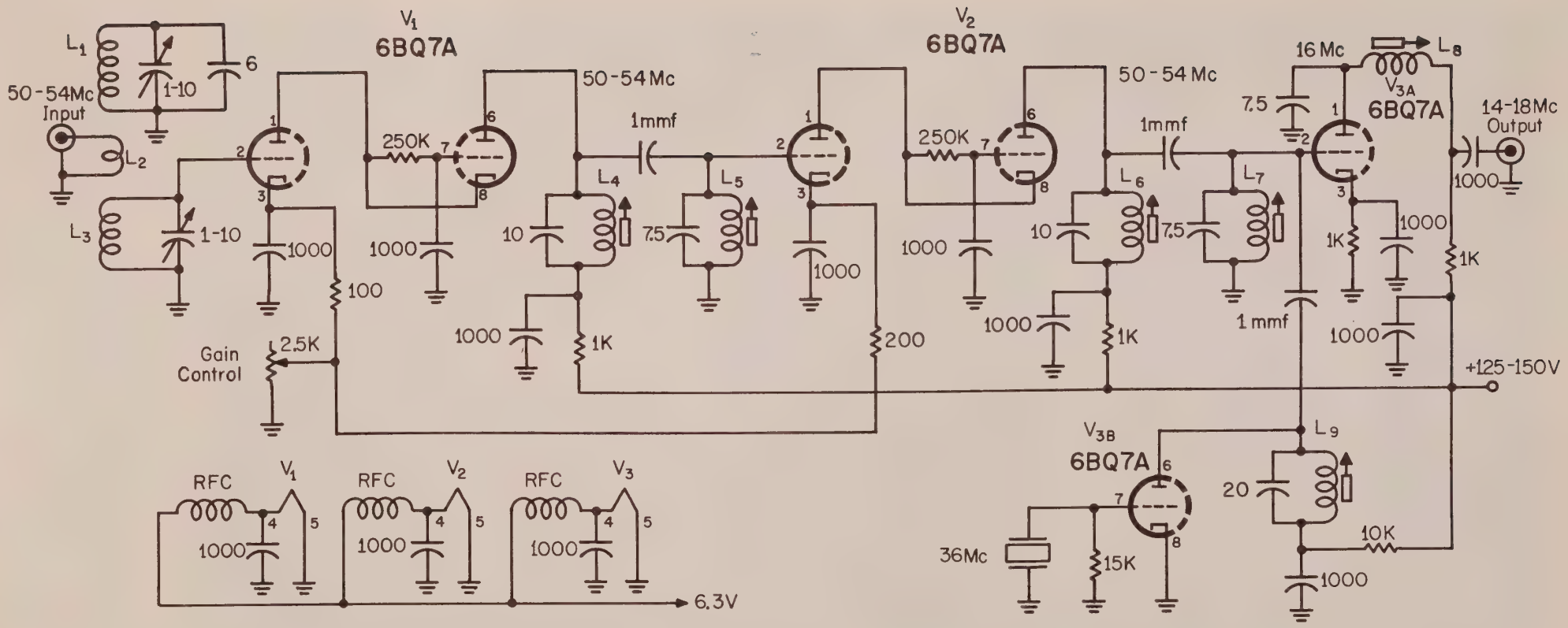

Fig. 6.3—Circuit of a 50 mc converter using an overtone crystal oscillator. The output, from 14 to 18 mc, must be coupled to the receiver through 3 feet of RG59U.

$L_{1,\ 2}$—9t, ⅝″ dia. 10 t.p.i. Airdux Coils.

L_3—1¾t over cold end of L_1.

$L_{4,\ 5,\ 6,\ 7,\ 9}$—8t #24E, .2″ long, .4″ dia. on Millen brass slug forms.

L_8—32t, #30E, ⅜″ × ⅜″ on CTC iron slug form.

RFC—6 to 8t of hookup wire, 1/16″ dia.

The circuit, fig. 6.3, consists of two r.f. cascode stages and a mixer and oscillator, all using one type of tube, the 6BQ7A. Other tube types suitable for this purpose are 6BS8, 6BK7, 6BZ7 or 2C51 dual triodes. Some have different pin connections than the 6BQ7A tubes but with characteristics similar enough so a slight readjustment of tuning capacitors or coil tuning slugs is all that is required. Double tuned circuits between stages are used to improve image rejection and to make it easier to broadband tune the whole converter to cover the 50 to 54 mc band. Since the 36 mc crystal oscillator is on the low side of the signal frequency, better image rejection results with capacity coupling with a one mmf capacitor than with link coupling between the coils of each stage. These capacitors can be small ceramic types, or can be made by forming two or three "twists" of hookup wire together. The thickness of insulation and size of wire may require from 1 to 3 twists to arrive at about 1 mmf of coupling capacity. A similar capacitor is used to couple the overtone crystal oscillator into the mixer tube grid circuit. Plate curvature rectification in the mixer is used and is less subject to strong signal cross-talk than when using grid leak bias. However, this is accomplished at a sacrifice in mixer sensitivity and more care is required in adjusting the oscillator injection voltage.

The mixer output circuit is a low Q tuned circuit, loaded heavily by the mixer tube and by the input circuit of the tunable i.f. receiver. The pi type circuit is tuned by the tube capacity and a 7.5 mmf fixed capacitor at one end and by the 60 or 70 mmf of coaxial cable capacity on the output side. This loaded lead should be about 2 feet long if made of RG58U cable, and about 3 feet long if made of RG59U, the two most commonly used small coaxial lines. The powdered iron slug tuned coil is roughly set at the middle of the i.f. band, 16 mc, by means of a grid dip oscillator with the converter tuned off frequency and the coaxial-line in place but not connected to the i.f. receiver. Any grid dip oscillator is suitable for this purpose.

Some alignment simplification results if the grid dipper is used to set the various tuned circuits to about the desired frequencies with the tubes in the converter but no power applied to the tubes. In this procedure, the double tuned circuits are each tuned with the other shorted. Final touchup of each circuit should be made with the converter in operation with a diode noise generator, or signal generator connected to the antenna coax fitting. A diode noise generator is to be preferred since more rapid checks can be made across the four megacycle band when only the i.f. receiver dial needs to be reset for checking nf, alignment, and sensitivity.

The overtone crystal oscillator is the simplest form of circuit in which the plate circuit is tuned a megacycle or two higher in frequency than the overtone crystal. Some types of crystals require more feedback than others and several circuits are suitable for this purpose. The one shown in fig. 6.4 will function with third, fifth or seventh overtone crystals. The overtone crystal is loaded heavily by a shunt resistor to prevent if from oscillating at its fundamental low frequency. This load stops the parallel resonance oscillation but does not stop the series resonant overtone oscillation.

A 4 × 8 × 2 inch aluminum chassis serves as a mounting shield box with all the parts mounted on a 4 × 8 inch panel or sheet of metal. Sheet copper is very effective for this panel because all ground leads or grounded pins on

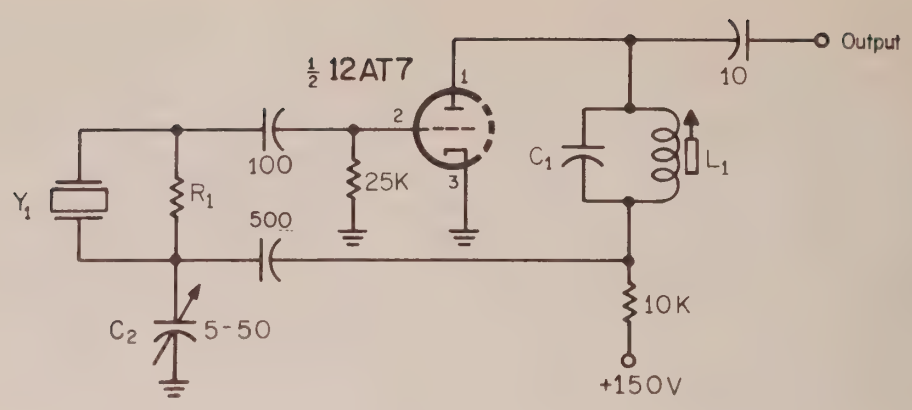

Fig. 6.4—A high overtone oscillator circuit. Output can be obtained up to 140 mc.

L_1-C_1—Tuned to high side of overtone crystal frequency.

R_1—150 to 500 ohms, ¼ w. resistor. R_1 prevents fundamental oscillation and exact value depends on crystal activity.

Y_1—5th or 7th overtone crystal up to approximately 140 mc.

the tube sockets can be soldered directly to it. Short ground leads are very important in VHF circuits. Common ground points such as sometimes used in HF circuits are not good at VHF. If an aluminum panel is used, thin sheet copper rings about ½ inch wide can be fastened down with several screws around each tube socket and all "grounds" soldered to it. This is even more important in grounded grid r.f. tube circuits.

In adjusting this converter for best possible nf, it will be found that the input circuit will be tuned to resonance in the desired portion of the 50 mc band, and the second input circuit tuned to the low edge (at about 49.5 mc). The other circuits can be tuned so nearly constant gain results over 4 mc with a little more than 1 mmf coupling capacitors, or to the lower 2 mc with a little less than 1 mmf. The oscillator tuning slug (copper or brass) should be screwed in a turn or two beyond the point of maximum converter sensitivity in order to insure reliable oscillation. The reverse holds true for powdered iron slug coils if used in place of the brass slug coils shown in this converter. The coils have to resonate in the 50 mc band (and oscillator frequency) so if iron slug coils are used, less turns or smaller diameter forms will be necessary. Either type can be made to work on 50 mc or higher.

6.2 144 MC Converter

The converter for 144 to 148 mc also has its output in the 14 to 18 mc region, with the mixer output system similar to the 50 mc converter. Reference to Section 6.1 may be made for a description of this output circuit and its adjustment.

Grounded grid r.f. stages give better noise figures at 144 mc than can be obtained with 6BQ7 cascode circuits. The overall r.f. gain with two grounded grid stages is less than with two cascode stages but a more sensitive mixer

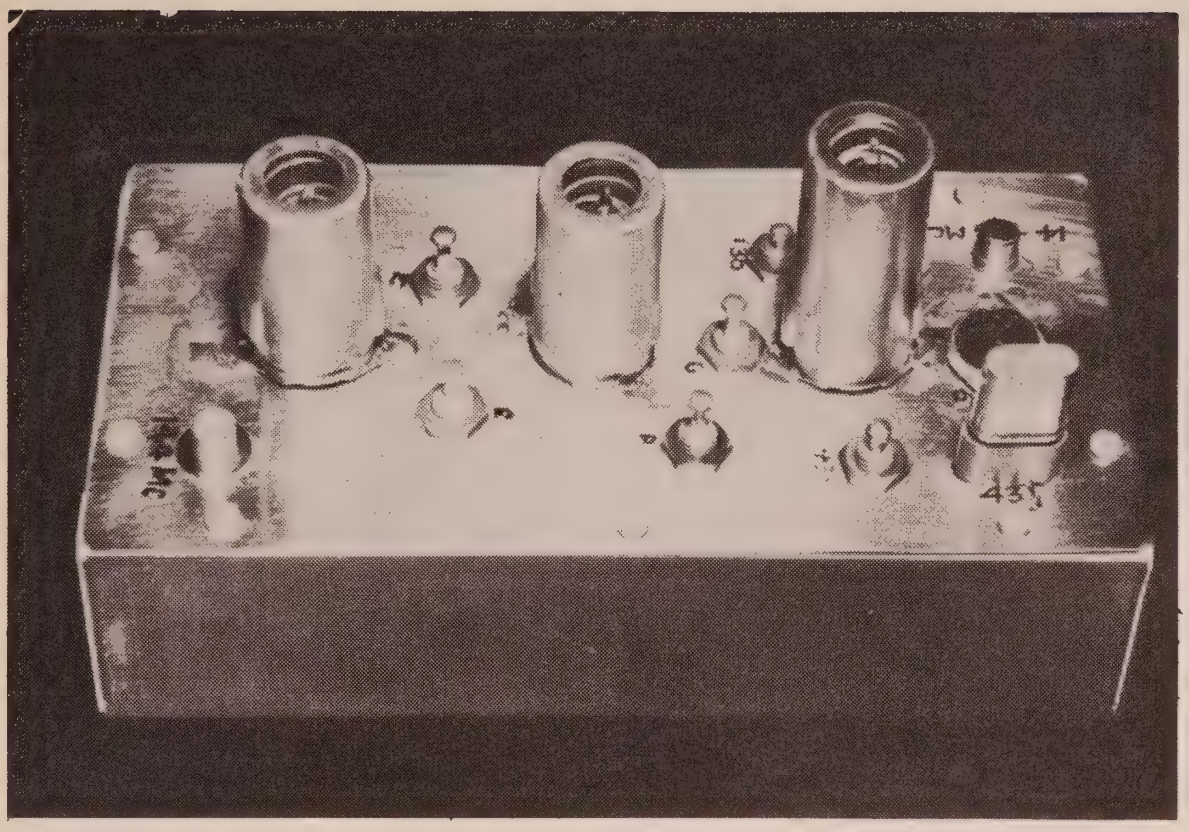

Fig. 6.5—Top view of a 144 mc converter. The tubes are, from l to r, V_1, 5842, V_2, 6AM4 and V_3, a 12AT7. Between V_1 and V_2 are adjustment screws for L_2, rear, and L_3 from. Between V_2 and V_3 are, rear, 130 mc oscillator tripler, L_9, center L_6 and front, L_5. Inductance L_8 is to the left of the crystal.

circuit can make up this deficiency without a sacrifice in nf. Man made noise, etc., is less at 144 than at 50 mc so a better nf is usable for weak signal reception. A 6AM4 first stage gave between 4 and 4½ db nf, while a more expensive tube, the 5842 or 417A triode gave noise figures of 3 to 4 db. Used tubes of surplus variety varied but averaged around 4 db. New 5842 tubes averaged around 3 db nf.

The image rejection measured about 50 db down from the signal response which is sufficient for the average location. A parametric preamplifier may be connected in front of this converter to drop the nf approximately 1 db and to increase the image rejection by as much as 20 db more for long distance 144 mc reception.

A simple overtone crystal oscillator with a 43.33 mc third overtone crystal is used to drive a CK715 diode crystal frequency tripler to obtain 130 mc output. This frequency heterodynes 144 to 148 mc down to 14 to 18 mc for tuning in a communications receiver. The crystal diode tripler will not put out as much voltage at 130 mc as can be obtained with a tube but its output is sufficient for 144 mixer grid circuit with grid leak detection.

Double tuned slug coil circuits are used in order to cover the 144 to 148 mc band and to give fairly good image rejection. The grounded grid input circuit was designed to provide best nf when connected to a coaxial line fed beam antenna. It is self-resonant in the band by means of the input capacitances of the 5842 tube. If a 6AM4 tube is used in the first stage, this coil should be a little larger in diameter since the input capacity of a 6AM4 is about half as high as a 5842.

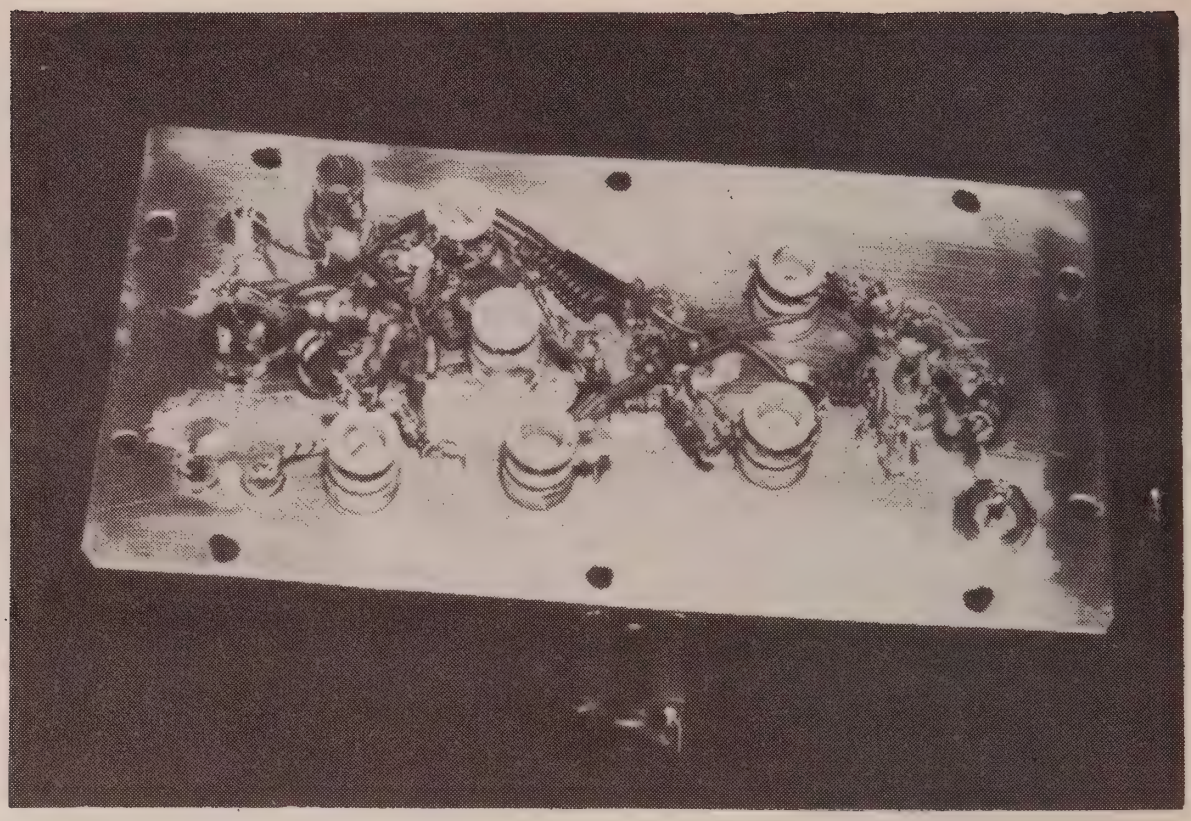

Fig. 6.6—Bottom view. Crystal socket may be seen at lower left and hookup wire type r.f. chokes can be seen between the tube sockets. Coil L_1 is located above the input connector in the lower right corner.

A 4 × 8 × 2 inch aluminum chassis is used as a base cabinet with a 4 × 8 inch piece of sheet copper for mounting of all parts. All of the grid prongs on each grounded grid socket are bent over and soldered to the copper plate. All ground leads are made as short as possible and soldered directly to this 4 × 8 copper plate with a large soldering iron. The latter is necessary since the sheet copper conducts heat away and a small soldering iron will not function properly.

Brass slug tuned coil forms (Millen) are used throughout except for the 16 mc output coil which has a powdered iron tuning slug. Powdered iron slugs with rather low permeability and small tuning range are available and may be used equally well at 144 mc as compared to brass slug coils. The Q is about the same in either case, possibly a little higher with the iron cored coil forms. The turns on the coils will be different and usually the coil forms are smaller in diameter. This means recalculating the coils and carefully checking each circuit with a grid dip oscillator covering the 144 mc band. The coils illustrated in fig. 6.6 have silver plated brass or copper slugs. The highest Q results when the coil turns are such as to tune the circuit to frequency with the slug as far out of the coil as possible.

6.3 220 MC Converter

The 220 mc converter shown in figs. 6.8, 9, and 10 is similar in some respects to the 144 mc converter. Two grounded grid r.f. stages with the same tube types, a 5842 and a 6AM4 are used with only one major difference. A single tuned circuit is used to couple the 5842 to the 6AM4

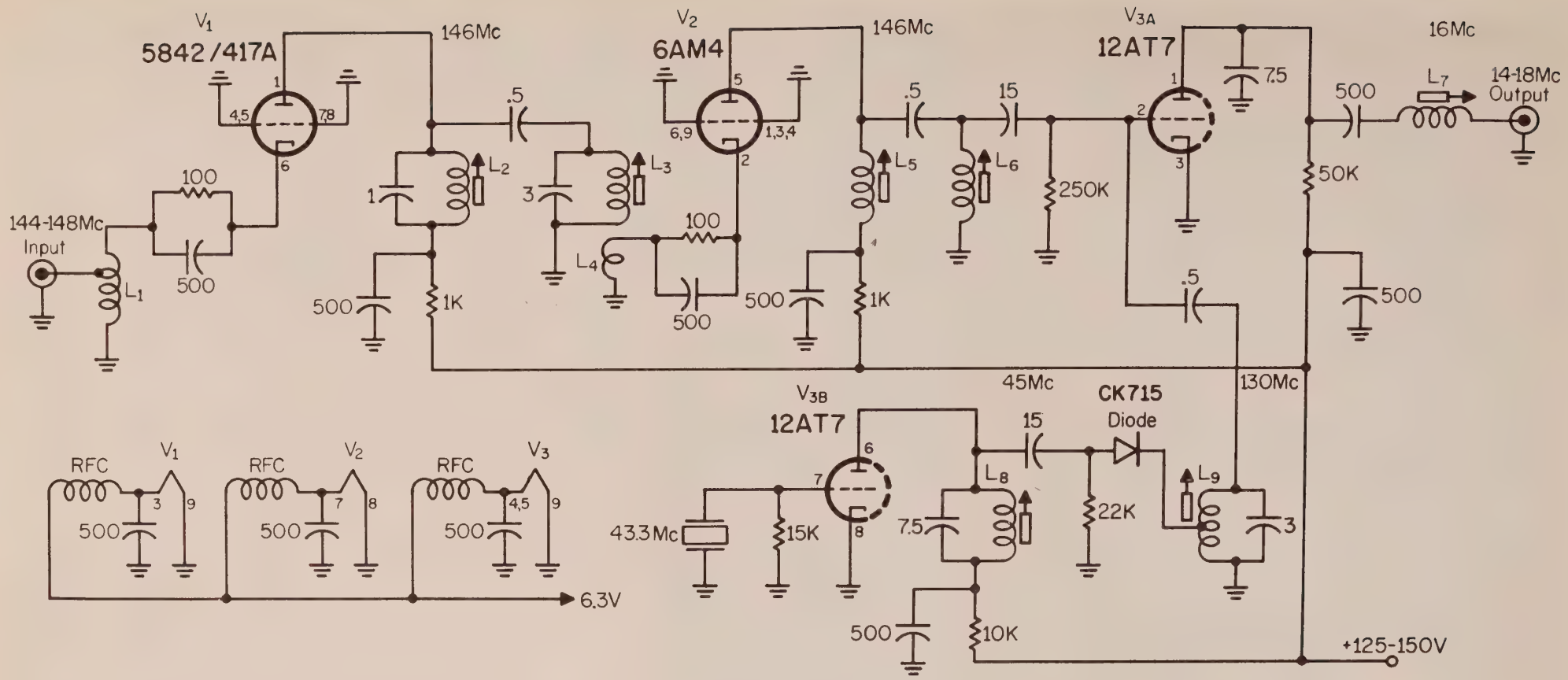

Fig. 6.7—Circuit of a 144 mc converter. An overtone oscillator into a crystal tripler provides adequate injection voltage when grid leak operation is employed. Output is coupled to the receiver through 3 feet of RG59U.

L_1—6t, #18, ⅜" long, ¼" dia., tapped 4 turns up from ground.

$L_{2, 3, 5, 6}$—4t, #20E, .2" long, .4" dia. Millen brass slug form.

L_4—1t, #22 dcc, around cold end of L_3.

L_7—32t #30E, ⅜" dia., ⅜" long on iron slug form.

L_8—10t #26E, .2" long, .4" dia. on brass slug form.

L_9—5t #20E, .2" long, .4" dia. on brass slug form, tapped 3 turns up from ground.

RFC—6 to 8t of hookup wire 1/16" dia.

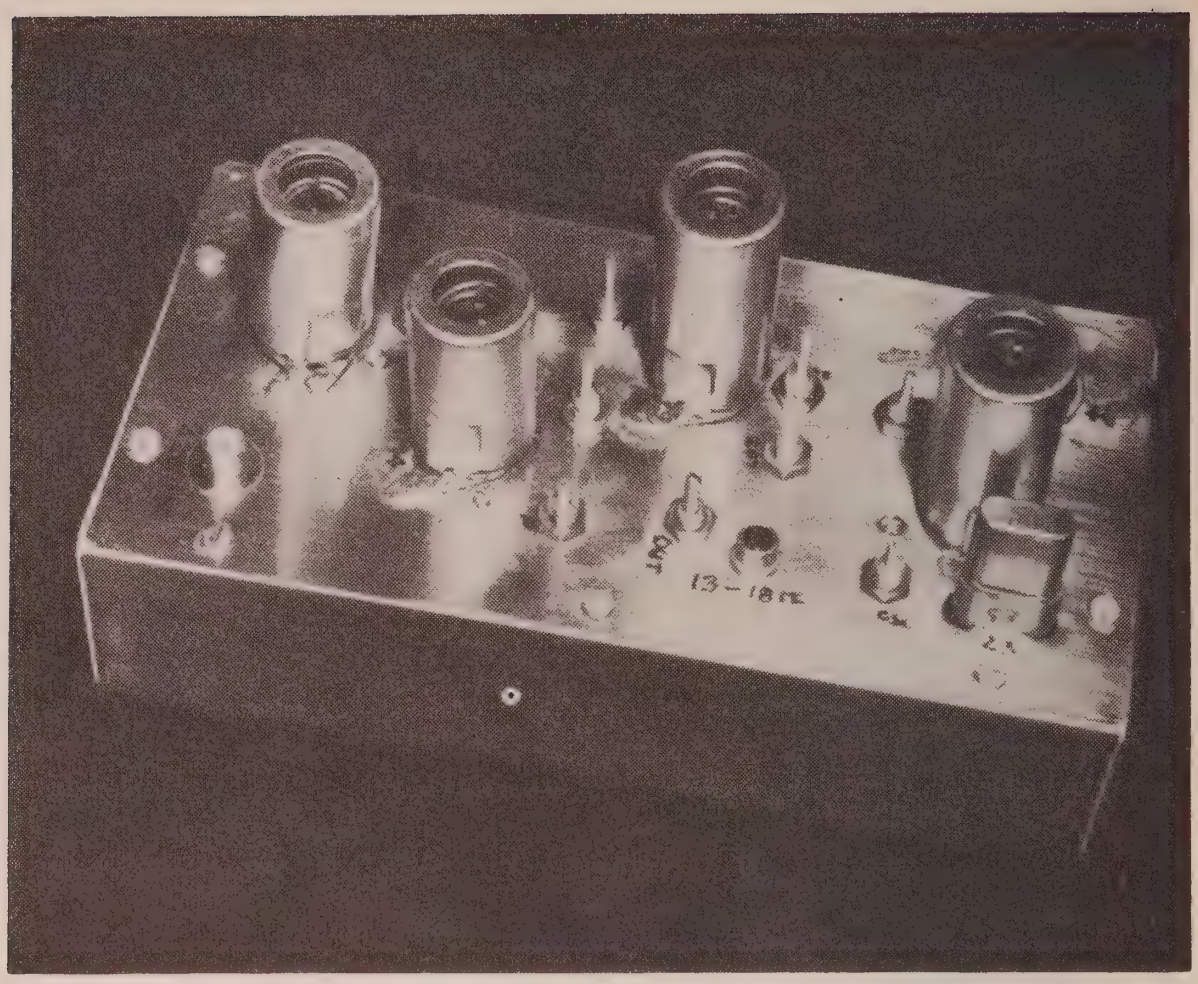

Fig. 6.8—Top view of a 220 mc converter. The tubes are from l to r. V_1, V_2, V_3, V_4. The adjustment screw for L_2 is behind V_2 and not visible. Coils L_3, L_4 and L_5 are between V_2 and V_3 from front to rear. The output connector and L_6 are located in front of V_3. Oscillator plate, L_7, is to the left of the crystal, in front of V_4. Directly above is L_8, and to the left of L_8 are L_9 and L_{10} alongside V_3.

cathode in order to get as high a gain as possible into the second stage for better nf. Triple tuned circuits are then used between the second r.f. and mixer tubes in order to get a fair image rejection. Probably the results would be about the same if double tuned circuits are used between those tubes instead of a single and a triple.

The crystal oscillator-multiplier system is one using three triodes, one as an oscillator near 23 mc and two frequency triplers in order to reach 206 mc for coupling to the grid leak detection type of mixer. A double tuned circuit is used into the mixer grid circuit in order to attenuate adjacent harmonic frequencies of the crystal oscillator. A higher frequency crystal such as 69 mc in the oscillator circuit of fig. 6.4, would improve this situation. A 69 mc oscillator would be tripled in frequency with either a triode or pentode tube, or even with a diode crystal tripler.

The nf measured 4 to 5 db with several 5842 tubes tried in the first r.f. stage. Image rejection only measured 40 db down but this would be increased to at least 60 db if a parametric amplifier is used ahead of the converter. The spurious responses were down 40 db only after careful adjustment of

the 23 and 69 mc circuits. A signal generator is used and set at the points of spurious signal responses, then the oscillator and its following circuits adjusted for minimum response at each of any spurious responses found in searching with the signal generator and fairly high signal levels. A higher frequency overtone crystal would minimize this problem, but with patience in making preliminary adjustments the problem can be overcome even with low frequency overtone crystals.

This converter, figs. 6.8 and 9, is built on a 4 × 8 inch copper plate made of heavy sheet copper. A 4 × 8 inch aluminum chassis completes the shielding. The coils in this converter are of ¼ inch diameter with small brass tuning slugs with the exception of a ⅜ inch diameter iron slug tuned coil in the mixer output circuit. The output circuit is similar to that used in the 50 mc converter. Reference should be made to Section 6.1 for a description and adjustment of this mixer output circuit. The small slug coils in the illustration, fig. 6.9, are nearly end-on view and look like some of the cup-shaped VHF bypass capacitors used in all bypass circuits at this frequency. The flat type of mica capacitors made for UHF service are even more effective in which the edge is soldered into a small slot in the copper mounting plate and the circuit connection is made to the center lug. A small slot can be made by drilling two holes close together and filing out the slot about 1/16 × ⅛ inch for this purpose. Bypass capacitors of 100 to 500 mmf are satisfactory.

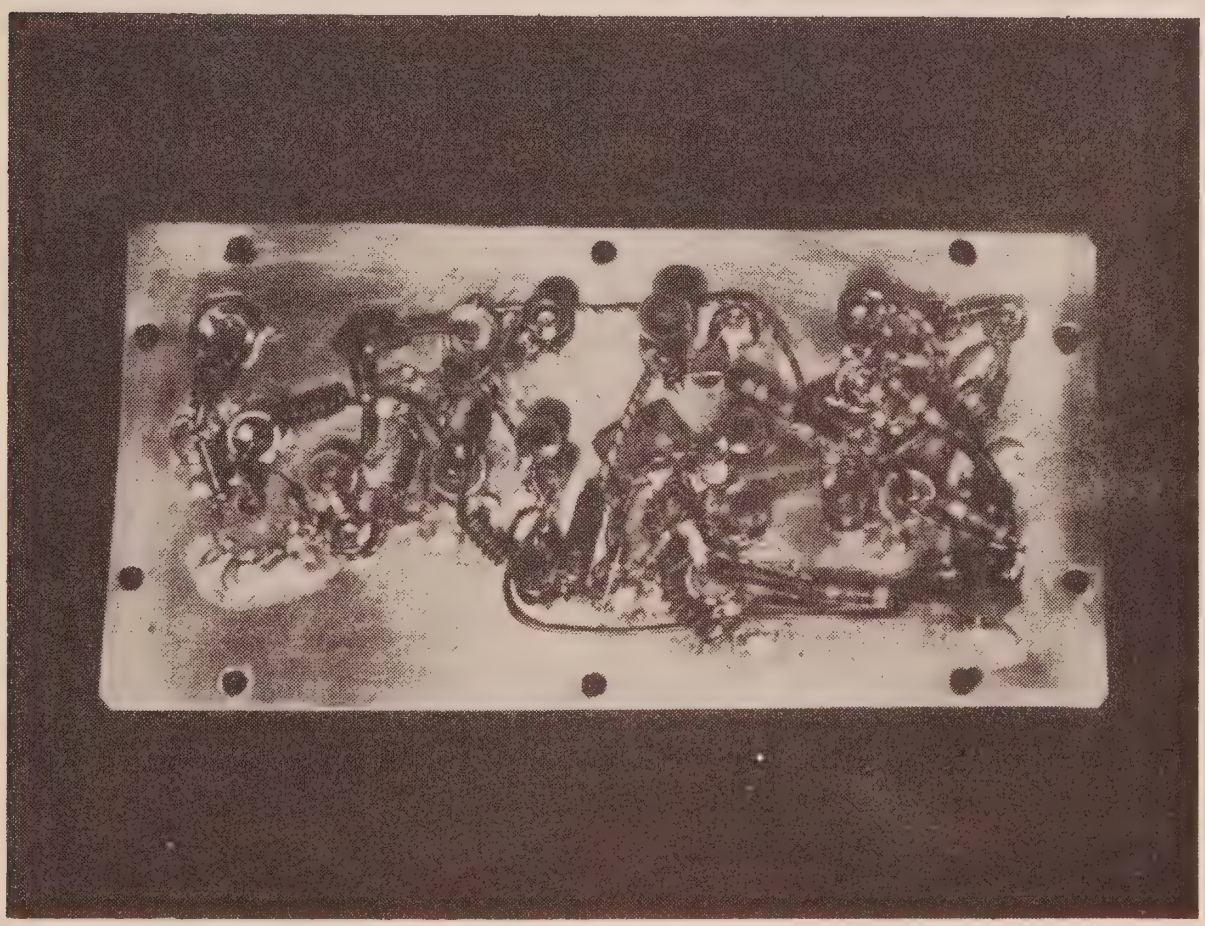

Fig. 6.9—Bottom view shows extensive use of button type bypass capacitors so neccessary at these frequencies. Inductance L_1 may be seen attached to the input connector in the upper left corner.

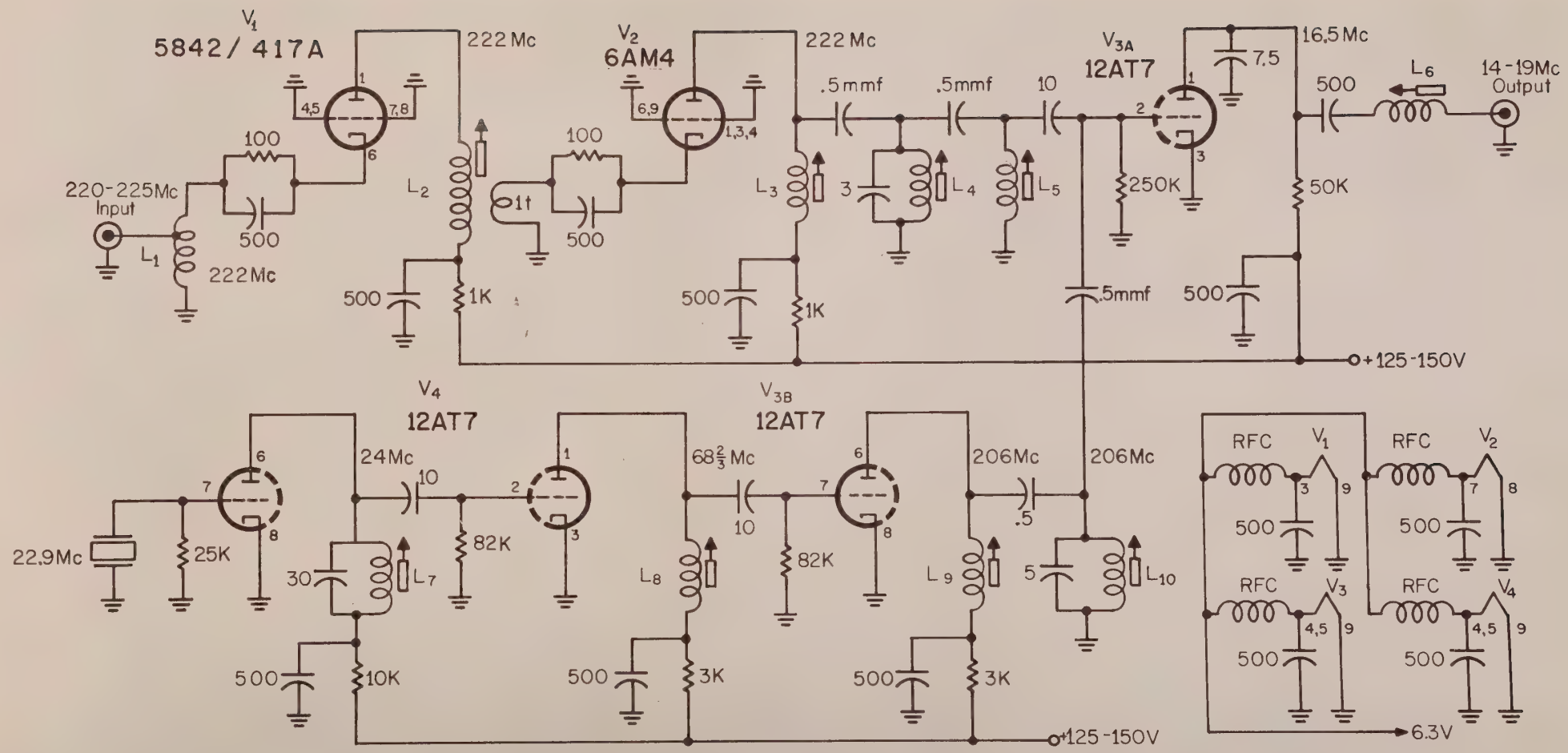

Fig. 6.10—Circuit of the 220 mc converter. An overtone oscillator and 2 triplers are used to develop a 206 mc oscillator injection signal.

L_1—4t #18E, ⅜" long, ¼" dia., tapped 3 turns up from ground.

L_2—5t #20E, 5/16" long, ¼" dia., on brass slug form with a one turn secondary on the cold end.

$L_{3,\ 4,\ 5}$—5t, #20E, 5/16" long, ¼" dia., on brass slug form.

L_6—32t #30E, ⅜" long, ⅜" dia., on iron slug form.

L_7—19t #28E, 5/16" long ¼" dia., on brass slug form.

L_8—13t #20E, 5/16" long ¼" dia., on brass slug form.

$L_{9,\ 10}$—5t #20E, 5/16" long, ¼" dia., on brass slug form.

RFC—6 to 8t of hookup wire, 1/16" dia.

The 5842 grounded grid triode is about 1 db better in noise figure than a 6AM4 or similar triode. However, if a parametric amplifier is to be used, both r.f. stages can be made with 6AM4 tubes. The only change besides pin connection on the first tube socket is to make the input coil a little larger in diameter, between 5/16 and 3/8 inch. This coil should resonate with the cathode input capacitance into the 220 mc band.

The ½ mmf coupling capacitors were made by twisting about 1 or 1½ turns of hookup wire (solid #24) together. If the wire has thin insulation, the capacitor consists of two loops, like hooks, around each other. Ceramic capacitors, 0.47 mmf, are available for this purpose. The horizontally placed coils in fig. 6.9 are heater supply radio frequency chokes made by twisting the heater lead hookup wire into 6 or 8 turns around a 1/16 inch drill as a form. This type of heater r.f. choke is desirable in all converter and exciter or oscillator circuits to prevent possible r.f. feedback and oscillator radiation.

6.4 432 MC Converter

Not many r.f. tubes are useful at 432 mc. The best type is the 416A or 416B gold plated triode available in surplus, or new at a very high price. The 417A, or 5842, has too much cathode to plate capacity. The 6AM4 and 2C40 grounded grid triodes will function at 432 mc but do not have a noise figure much better than a good crystal diode mixer, in fact not as good as some selected diode mixer crystals. The only advantage of an r.f. stage in this case is the added image rejection due to more tuned circuits. The 416A or B tubes do have a lower noise figure and the converter shown in figs. 3.11 and 12 measured between 4 and 5 db noise figure. The image

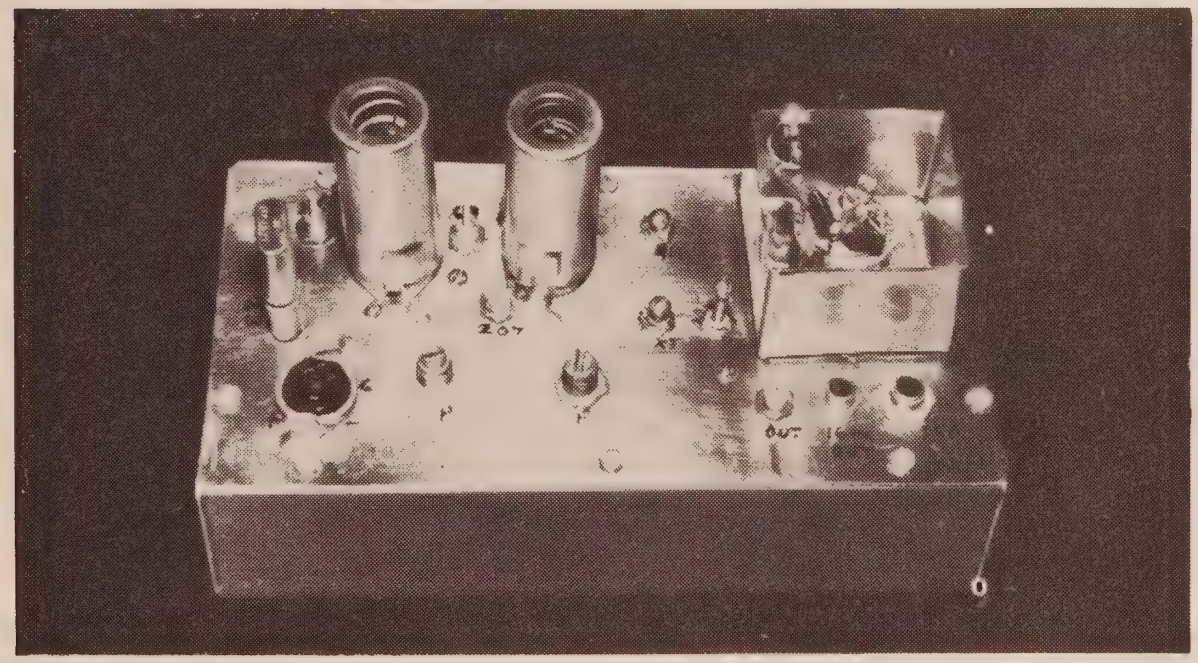

Fig. 6.11—A 432 mc converter. The 416A or B is in the shield on the right. The crystal and two 12AT7s, V_1, V_2, multiply up to 416 mc. Components across the front of the chassis are, from l to r, power plug, plate pot, filament pot, L_5, output jack and milliammeter jack. Adjustment L_8 may be seen between the crystal and V_1; L_7 is between V_1 and V_2; L_6 is in front of V_2. The piston capacitors between V_2 and V_3 are; top, C_4, bottom left C_3, right C_2.

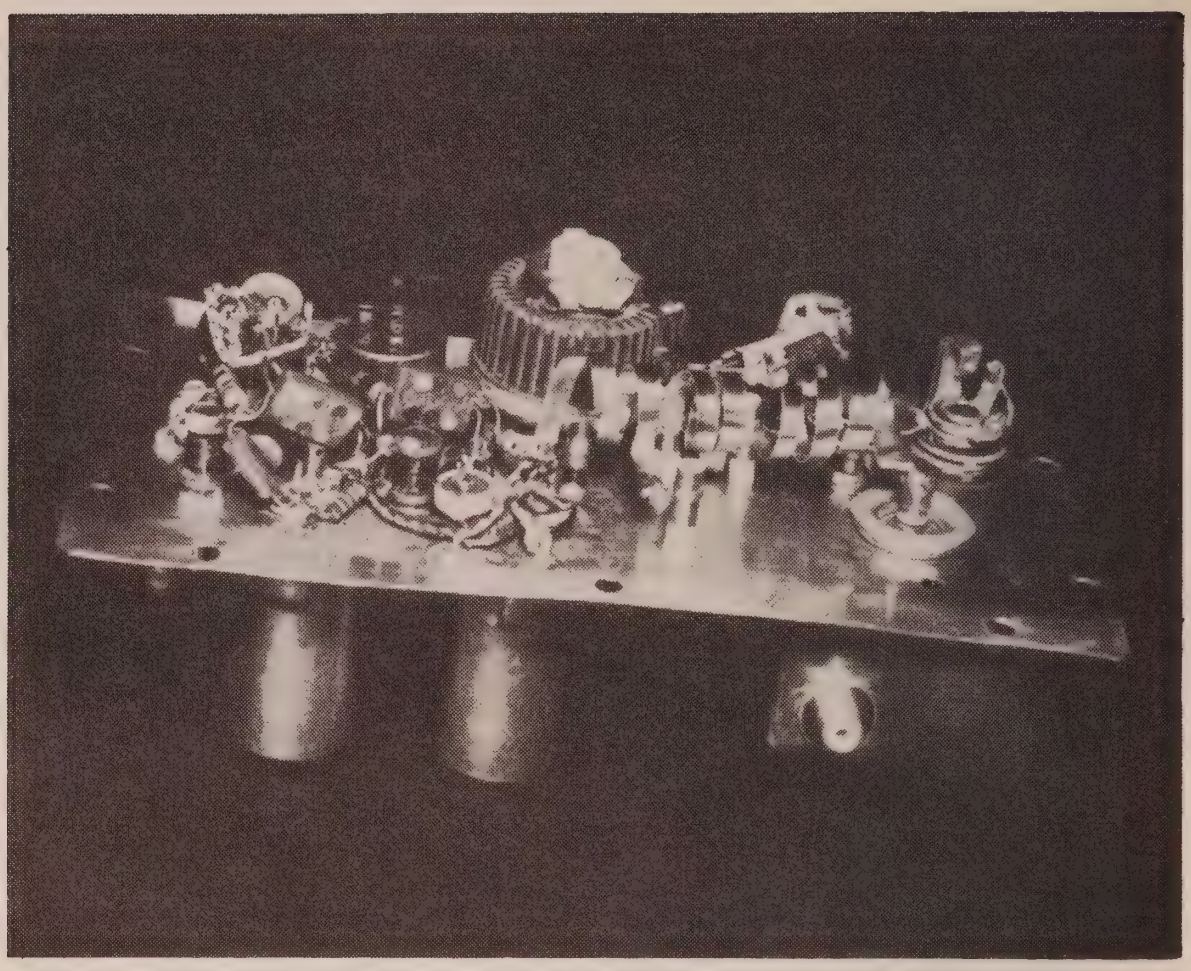

Fig. 6.12—Bottom view showing copper strip coils. Plate coil of 416A is connected between plate and C_2, the piston capacitor. The center coil, L_3, feeds the crystal mixer visible just above the 416A plate coil. The third coil is L_4, the oscillator multiplier chain output and it is terminated at C_4. The filament and plate pots for the 416A may be seen on the rear of the chassis.

rejection with a 14 mc i.f. system is over 20 db down and other spurious signal responses down 30 db. The sensitivity is good, with a tone modulated signal of less than one microvolt being usable in the receiver noise.

The circuit, fig. 6.13, has a single r.f. grounded grid stage coupled into a low priced 1N82A diode crystal mixer. Much better crystals, at much higher prices, are available for this purpose but are not necessary with a high gain 416B r.f. stage. The oscillator chain starts with a 23+ mc crystal, though a 69+ mc crystal, with the circuit of fig. 6.4, would eliminate one triode and give less spurious signal responses. The two dual triode 12AT7's multiply the 23+ mc crystal frequency up to 416 mc for tuning the 432 signals in at about 16 mc in the i.f. system. In many localities all of the stations are between 431.5 and 432.5 or 433 mc.

The converter is built on a 4 × 8 inch copper plate which fits on a 4 × 8 × 2 aluminum chassis. The 416A or B is mounted on top of this plate by its grid flange and a ¾ inch by 40 thread nut under the chassis. A ¾ inch diameter hole is needed in the copper panel or plate. For shielding and protection of the 416A or B a piece of copper sheet 1¼ inches high is folded into a 2 inch square with an open top for ventilation. This surrounds the tube on top of the 4 × 8 mounting panel. Convection cooling of a 416A

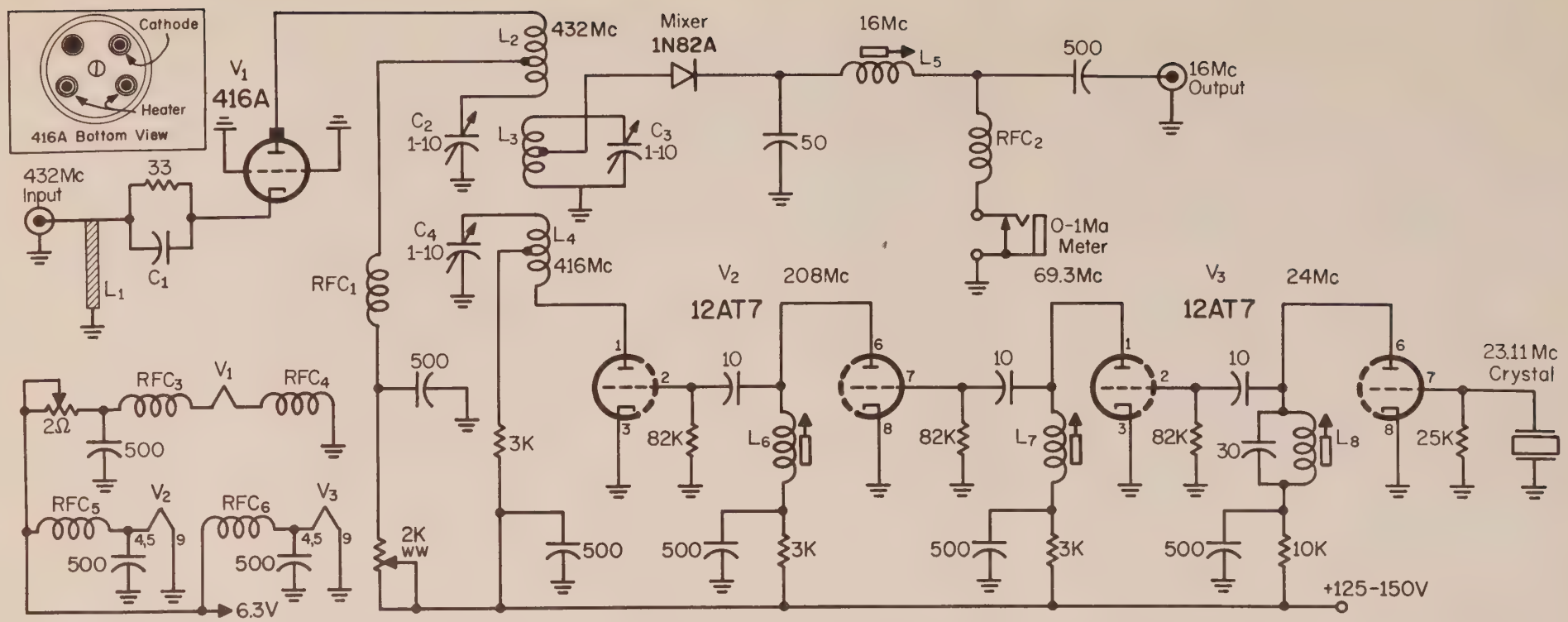

Fig. 6.13—Circuit of the 432 mc converter. Copper strip coils produce high Q that gives performances comparable to trough and coaxial lines. Couple to the receiver through 3½ feet of RG59U.

L_1—Copper strip, ⅛" wide, 1¼" long from ground to cathode shell of 416A or B.

L_2—Copper strip ⅛" wide, 3 turns, ½" dia., ¾" long, tapped 1 turn up from capacitor C_2.

L_3—Copper strip, ⅛" wide, 2 turns, ½" dia., ½" long, center tapped.

L_4—Copper strip, ⅛" wide, 2 turns, ½" dia., ⅝" long, center tapped.

L_5—16t #28E, ⅜" dia., ⅜" long on iron slug form.

L_6—4t #20E, ¼" dia., 5/16" long on brass slug form.

L_7—13t #26E, ¼" dia., 5/16" long on brass slug form.

L_8—19t, #28E, ¼" dia., 5/16" long on brass slug form.

$RFC_{1, 3, 4}$—7" #22E, ⅛" dia.

RFC_2—50 microhenries.

$RFC_{5, 6}$—6 to 8t of hookup wire, 1/16" dia.

C_1—Internal capacitor of the 416A or B.

at moderate plate current values seems to work out satisfactorily. The 416A's get hotter but by careful adjustment of the heater voltage and current to permit the tube to operate, even these tubes function for long periods of time. A one or two ohm rheostat drops the 6.3 volt supply to values between 5 and 6 volts on the 416A type of tubes. This rheostat is visible in fig. 6.12 and is indicated in the circuit diagram of fig. 6.13. The warm-up time for 416A's is two to three minutes. If the 416A or B tubes are entirely enclosed, or operated at higher plate voltage and current values, forced air cooling is needed.

The cathode circuit of the r.f. stage is a strip of copper ⅛ inch wide and about 1¼ inches long from its grounded end up to where it is connected to the r.f. shell of the tube. I use the quick way for connections and solder it to the rim of the cathode shell of the 416A's. A clamp around the tube up near the rim may be used, in which case the exact length of this quarter wave line may be different. It should resonate at 432 mc with the input capacity of the tube which is about 10 mmf. The antenna coax fitting, mounted in the side of this little box, connects to the cathode circuit with a short piece of copper strip to the top end of the cathode strip circuit, very close to the tube connection. This simple input circuit gives the proper impedance values for 50 ohm circuit into the cathode for best nf. The actual cathode input impedance is between 100 and 200 ohms inside of the tube for best nf—and not 50 ohms or less which would be indicated by the high G_m of this tube. With nearly zero bias and about 125 volts plate supply, these tubes have G_m values of 20,000 to 40,000 ohms with plate currents of perhaps 8 to 15 milliamperes. High plate current doesn't always mean better noise figures and gain in any of the VHF bands with either 416A-B or 417A tubes. Often a tube will give high G_m values with zero bias and plate voltage less than 100 volts, and have a good low noise figure reading.

The 416A-B tube plate circuit, fig. 6.12, consists of some more copper strip about ⅛ inch wide coiled to form ½ inch diameter coil of three turns about ¾ inch long. It is series tuned with a 1 to 7½ or 1 to 10 mmf plunger or piston type tuning capacitor. Next to it is a 2 turn copper strip coil shunt tuned with a similar capacitor mounted ½ inch from the r.f. plate tuning capacitor and about ¼ inch beyond the edge of the coils. The 1N82A crystal diode taps in at the center of this coil. The oscillator chain output coil also consists of 2 turns in line with the preceding coils with a similar series tuning capacitor. The other end of this coil solders to the plate pin of the 416 mc doubler tube. The copper strip coils have high values of Q and under these load conditions compare very favorably with trough or coaxial lines. These required much more space and compared closely in nf, gain, and image rejection in another converter in tests with this for comparison.

The mixer output circuit matches the crystal i.f. impedance of perhaps 500 ohms or more, to the 70 ohm input impedance of the i.f. receiver. About 3½ feet of RG59U coaxial line is needed to have the correct output capacity in this circuit. If a shorter piece of line is used, a small capacitor can be connected across the converter output jack to ground to build this total capacity up to around 100 mmf. A small r.f. choke of 15 microhenrys or more and a closed circuit jack permit plugging in a 0-1 ma meter for measuring crystal mixer d.c. current. This should be not less than ¼ ma and

usually less than ¾ ma for the 1N82A crystals. The current is adjusted for best nf and gain of the converter by the degree of coupling between the 416 mc and the 432 mc crystal circuits. Fine control is accomplished by detuning the crystal oscillator plate coil on the low inductance (high frequency) side of resonance. All the other frequency multiplier circuits are tuned to resonance at each stage frequency of 69+, 208 and 416 mc. The r.f. stage and crystal mixer circuits are tuned to 432 mc and will need no readjustment over a range of about one mc. This means that no further tuning is required in the converter, provided the stations in the area are operating within the range of 432 ± .5 mc.

A variable plate voltage dropping resistor was included since it was desired to be able to use 125 volts plate supply from a 150 volt source. If the converter plate supply is between 100 and 125 volts, this resistor can be omitted. The 416A-B plate r.f. choke was made by coiling up 7 inches of number 22 enameled wire into a diameter of ⅛ inch or less for connection from the plate coil, one turn above the tuning capacitor, to the 500 mmf bypass capacitor. The heater r.f. chokes were of similar design. Tube socket

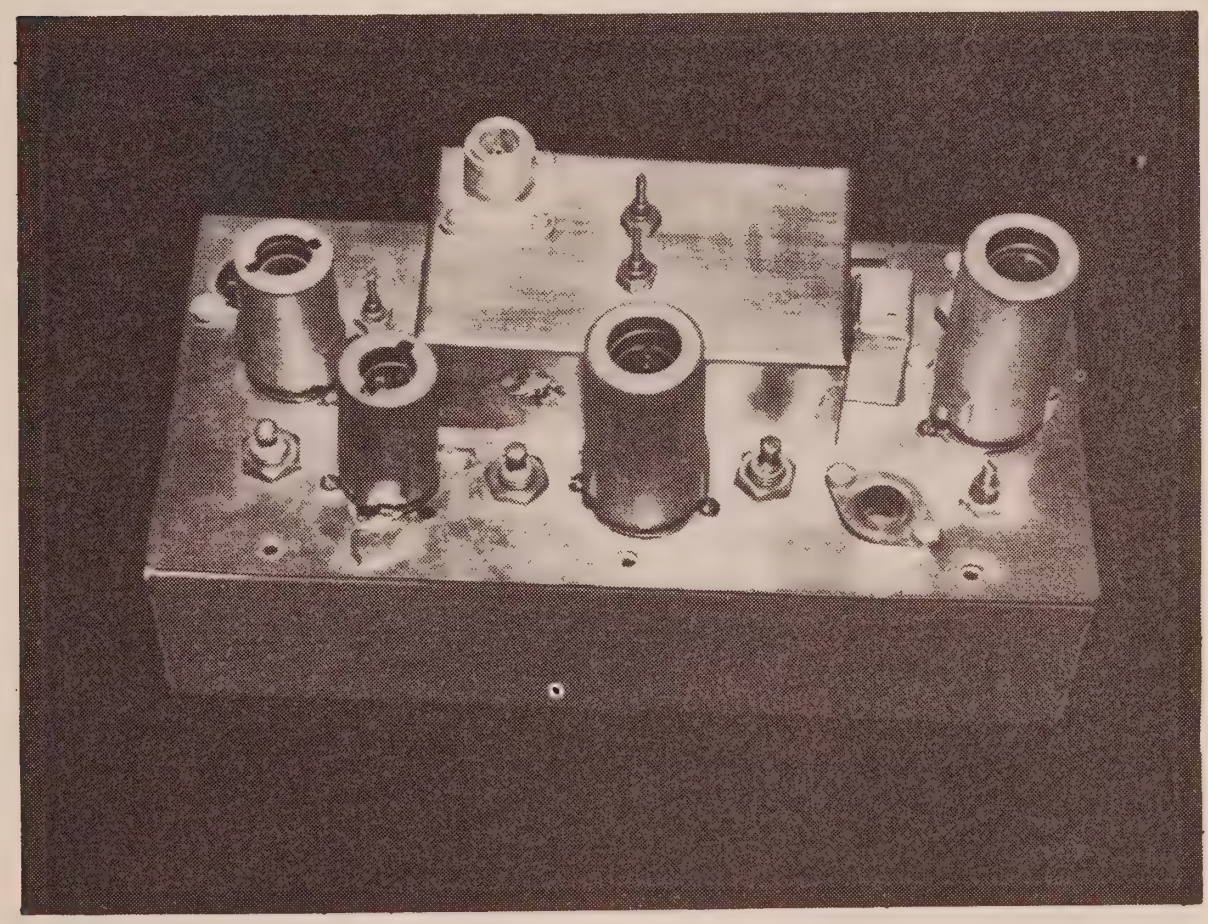

Fig. 6.14—Top view of the 1296 mc converter. If output is at 16 mc. Tubes are, from l to r, V_1, V_2, V_3, V_4. The box to the rear of V_3 is the trough line housing whose details are given in fig. 6.17. Mounted on the trough line box are the antenna input and the two piston capacitors. The small end shield on the right covers the mixer crystal and i.f. output to the 6BQ7, V_4. The output jack is at the lower right. To the right of it is L_5 and to the left is L_{10}. To the left of V_3 is L_9. Adjustment screw L_8 is between V_1 and V_2. Behind V_1 is C_4 which tunes L_7. Coil L_4 is behind V_4 and not visible.

clips from a broken loctal socket were used for pin connectors on the r.f. tube.

If the nf or sensitivity of the i.f. receiver is not very good, a low noise figure i.f. amplifier should be connected between the crystal mixer and the communications receiver such as was done in the 1296 mc converter shown in the next section.

6.5 1296 MC Converter

The converter for 1296 mc consists mainly of a string of frequency multipliers from a crystal oscillator and a couple of diode crystals in half wave tuned circuits at and near 1296 mc. The mixer diode circuit is tuned to 1296 mc or whatever spot in the band receiving is to be done. The other similar half-wave circuit is tuned to one side of this receiving frequency by the amount of the i.f. frequency. A 144 or 50 mc receiver or converter makes a good choice for the first i.f., in which case the tuning would be done in the next lower i.f. system such as the 14 to 18 mc band. In the converter shown in figs. 6.14, 15, and 16, the first i.f. was omitted and 16 mc tuning i.f. range meant 1296 — 16 = 1280 mc for the crystal controlled output. The second half wave tuned circuit was tuned to this frequency and loosely coupled to a 1N82A diode crystal tripler from 426⅔ mc. Tube triplers and doublers were used to work from a 23.7 overtone crystal. The steps were 23.7 mc to 71.1 mc to 213.3 to 426⅔ to 1280 mc. The advantage of

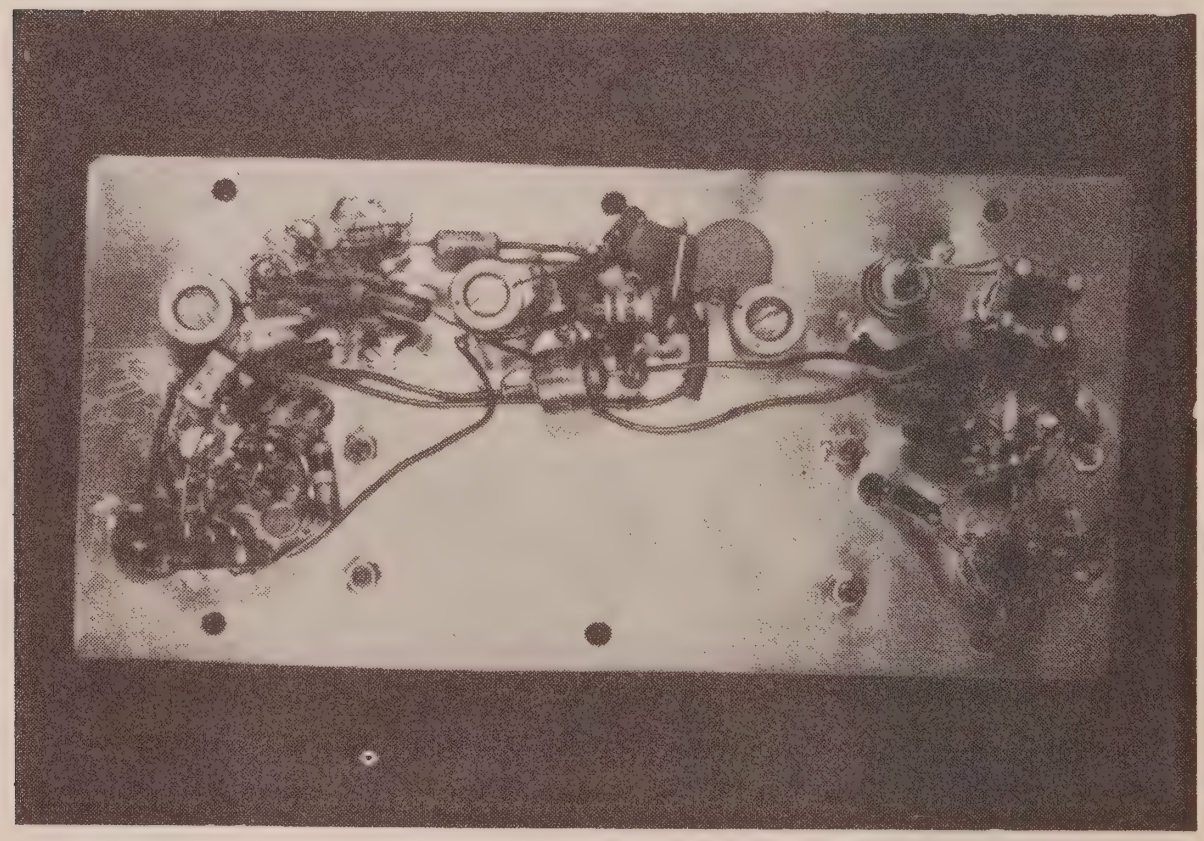

Fig. 6.15—Bottom view of the 1296 mc converter. Center tube is V_3. The pig tail crystal may be seen just above the tube socket. To the left is L_9, to the right, L_{10}. Coil L_5 is in the upper right. The lead coming through the chassis to $L_{3,4}$ is from the mixer crystal.

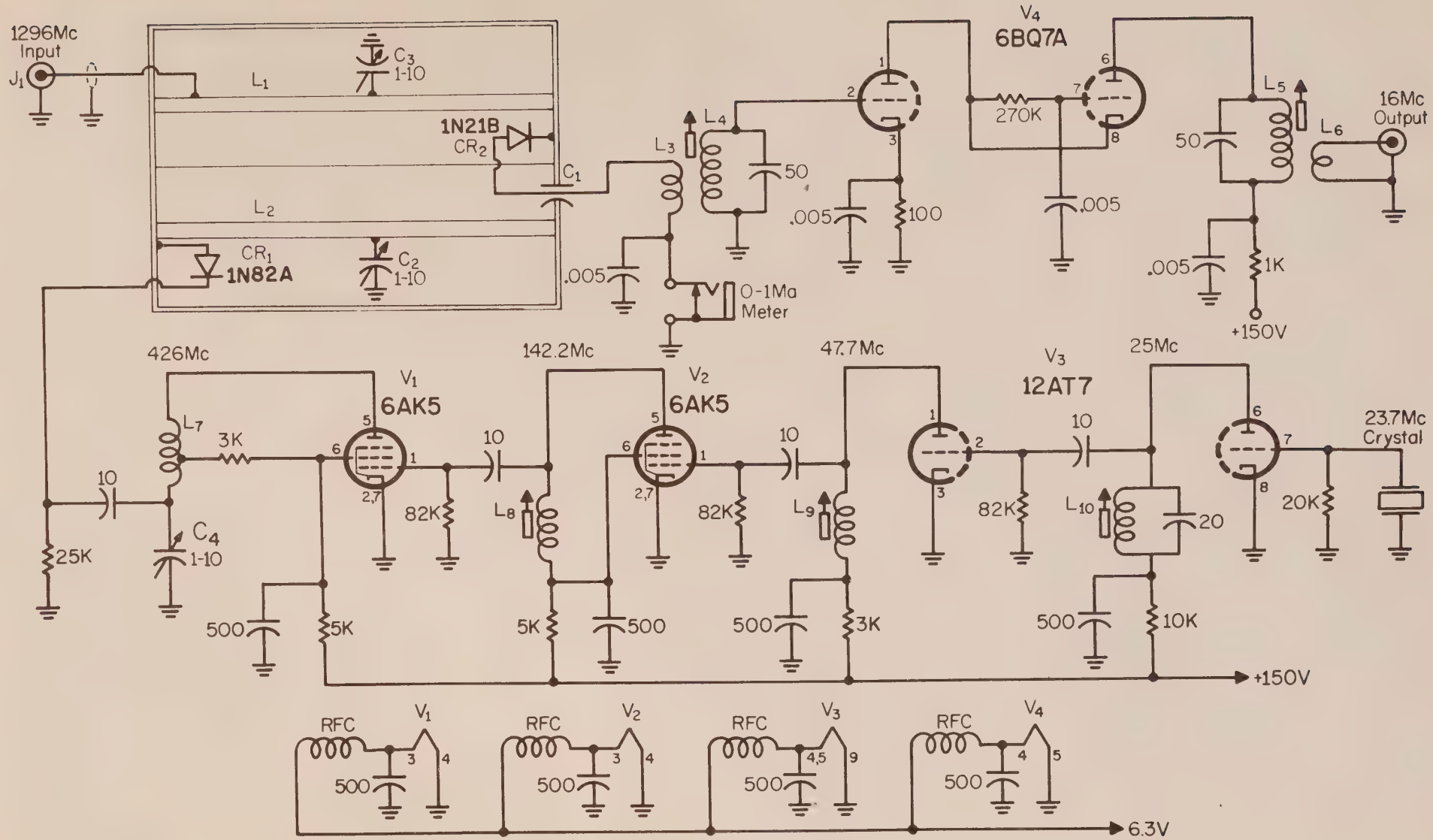

Fig. 6.16—Circuit of a 1296 mc converter with a 16 mc output. See parts list on next page.

Coil data and parts list for fig. 6.16 (*preceding page*).

$L_{1,2}$—3⅝" long, ¼" dia. tubing.

L_3—4t #24E over cold end of L4.

$L_{4,5}$—11t #24E, ⅜" long, ½" dia. on iron slug form.

L_6—2t over L_5.

L_7—4t #20E, ¼" dia., ⅜" long, tapped one turn up.

L_8—3½t #22E, .2" long, .4" dia. brass slug form.

L_9—10t #26E, .2" long, .4" dia. brass slug form.

L_{10}—12t #26E, .2" long, .4" dia. brass slug form.

C_1—5 to 10 mmf bypass. See fig. 6.17 for details.

RFC—6 to 8t of hookup wire, 1/16" dia.

this system is that the 1296 converter can be switched into operation in exactly the same manner as are other converters for each VHF and UHF band, using a single small selenium rectifier power supply. A two pole six position switch is used to switch the heater voltage and the i.f. output leads into and out of each of five converters. The sixth position is for HF straight through operation, or another converter if desired.

The disadvantage of using an oscillator injection voltage so close to the desired signal is the loss of image rejection and some loss in noise figure. Care must be taken in tuning the two boxed up half wave circuits not to accidentally tune both to the same frequency. If the diode mixer d.c. current measures very high, probably this circuit is also tuned to 1280 mc. A diode noise generator and signal generator are very helpful in tuning up the front end and a suitable arrangement for this purpose is shown in the chapter on Test Instruments.

The heart of the 1296 converter is a little brass or copper box 3⅝ × 2½ × 1 inch with a center partition dividing it into two compartments, each 3⅝ × 1¼ × 1 inch in size. A piece of quarter inch diameter brass or copper tubing runs down the center of each of these rectangular spaces in a form of half-wave circuit with each end grounded. The "hot" point is then at the center of each of these half wave tubes, and since they are a little less than a half wave long at each frequency, a piston type capacitor of 1 to 6 or 1 to 10 mmf tunes each circuit, one to 1296 and the other to 1280 mc. These two capacitor adjusting screws are visible near the center of this box in fig. 6.14. A sketch of this box layout is shown in fig. 6.17. A type N or BNC fitting can be mounted so as to connect the center pin to the mixer line about ½ inch from one of the shorted ends. The 1N21B mixer diode (or better nf type if available) is mounted in a small friction sleeve in the other end of this box compartment. A piece of 5/16 tubing with saw slots in it for gripping the large end of the diode cartridge, can be soldered readily into the box wall. Inside of the box a small tube pin clip and short piece of hook-up wire runs along the inner conductor for about ¼ inch, then over through a hole in the inner compartment wall and back to a bypass capacitor feedthrough arrangement in the "oscillator" compartment wall not far from the diode mounting sleeve. A little 1280 mc power is coupled into the output side of the mixer diode by this half wave circuit, which in turn is driven by

the 1280 mc 1N82A crystal tripler. This diode is mounted by wire leads near the other end of the 1280 mc half wave line with one lead to ground (box) and the other through a hole in the end of the box and down to the 426 mc circuit beneath the 4 × 8 chassis mounting plate. This neat little box circuit was designed and built by K6AXM and W6VSV as a final effort to get the author on the 1296 mc band. It has been in use for several months for reception of signals over distances of 30 to 60 miles from W6AJF, and not line of sight in most cases. The neat adjustable coaxial brass gadget shown in the Test Instruments chapter is another of these two amateurs' efforts for 1296 mc testing. This was used in the output of a crystal multiplier connected in the 432 mc signal generator output line to provide 1296 mc signals. A selective 1296 filter of this type eliminates other harmonics and also the 432 mc component. The same gadget will tune to

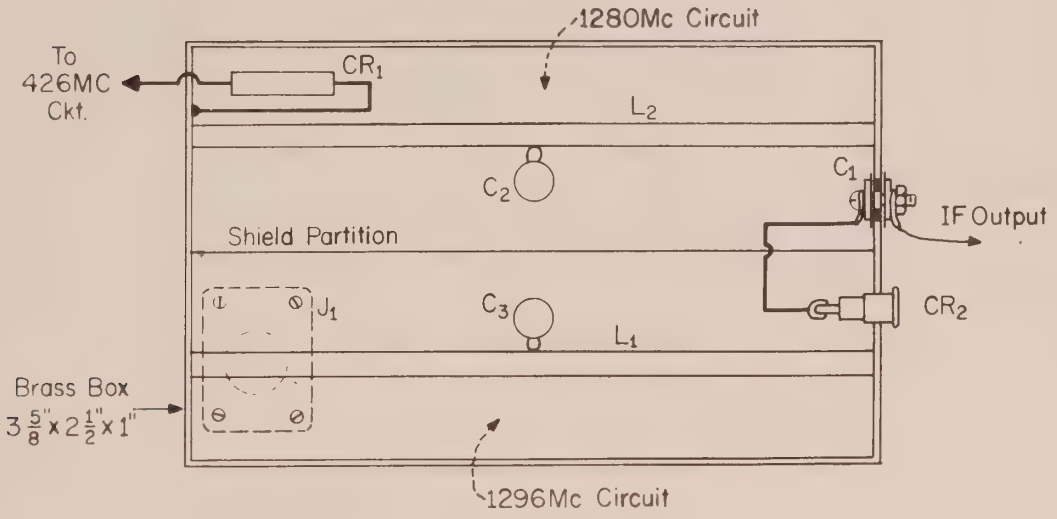

Fig. 6.17—Details of the 1296 mc converter trough line. The circuit is constructed in a brass box 3⅝ × 2½" × 1" and clamped to the chassis plate to complete the shielding of the two circuits.

C_1—R.f. bypass, 5 to 10 mmf. Small copper tab about ⅜" in diameter with .01" sheet mylar under it, mounted by a machine screw insulated by collars from the brass box.

$C_{2,3}$—1-10 mmf glass insulated piston capacitors.

CR_1—1N82A tripler diode. Connection loop runs close to L_1 for ½".

CR_2—1N21B mixer diode in friction sleeve holder with loop coupled into the 1280 mc line, L_2, for oscillator pickup.

$L_{1,2}$—3⅝" long, ¼" dia. tubing half wave lines grounded by soldering to box at both ends.

J_1—N or BNC coax fitting for 1296 mc input, connected to L_2 ½" from the ground end.

432 mc with the plunger line nearly full "in" so it can be used with the same coaxial unit crystal tripler to get a nice 432 mc test signal from a 144 mc signal generator.

In preliminary alignment a 0 to 1 milliammeter is plugged into the diode mixer jack and the oscillator and all frequency multipliers adjusted for maximum current reading. The oscillator, as with nearly all overtone circuits, has to be tuned on the high frequency side of the crystal frequency to insure ready starting of oscillation each time the unit is turned on. The other circuits are all tuned to give maximum mixer current. The mixer circuit is tuned on the high side to 1296 for best signal or noise generator pick up. The diode d.c. meter reading will drop down to some value below ½ ma under proper tuning conditions. Some diode mixer crystals will give good sensitivity with even less than ¼ ma.

The d.c. reading should be kept below 1 ma when switching over to transmit. A good coaxial switch with type BNC or N fittings or a coaxial relay designed for this microwave frequency will protect the mixer diode from burnout damage when the transmitter is operating. The usual amateur practice is to use as little coaxial line as possible at 1296 mc, since line losses are excessive. If the antenna is more than 5 or 10 feet away from the coaxial switch or relay, a balun should be used into a balanced two wire line to the antenna.

The crystal diode tripler choice of a 1N82A was made as a result of trying several diodes made for frequency multiplying at the lower frequencies. The 1N82A gave more output in the 1280 mc region when driven by the 426 mc tube. Parametric type diode crystals make even better frequency multipliers but are too expensive at the present time for this use by amateurs. The 1N82A is not as low noise a crystal for mixer service as some 1N21B diodes, but is more efficient as a frequency multiplier. Later series crystals such as 1N21E etc. are very fine for 1296 mc mixers but are not readily available at modest cost.

A 6BQ7A cascode i.f. stage at 16 mc was built into the converter unit to insure getting as low a noise figure as possible and to raise the overall gain to values comparable to other converters on the other bands. The mixer diode has some loss so additional gain is needed at r.f. or i.f. frequencies. The latter is more practical in this converter. This i.f. stage should be tuned to the frequency range chosen to tune the signals, in this case 16± mc. If a first i.f. of 51 or 52 mc is chosen, a good converter in this region such as the one described in Section 6.1 would eliminate the need for the built-in i.f. stage, and the mixer output circuit would be of the type shown in the 432 mc converter. The pi circuit would be tuned to 51 or 52 mc with a smaller coil and smaller capacity values. A range of 50 to 51 mc for the i.f. should be avoided because a strong 50 mc signal will get directly through this type of converter into the i.f. A 52 or even 53 mc frequency as the i.f. is far better for 1296 mc or 432 mc converters. It is very disconcerting to apparently hear DX stations from other call areas in these UHF bands.

7

Receiver IF Systems

RADIO receivers for VHF reception fall into two main classifications, those designed for mobile operation, and the other, for fixed station use. The mobile receivers are generally broadband for ease of tuning and to simplify frequency stability problems, and are nearly always very compact to conserve space in an automobile. At the present time there is a transition period in which tubes are becoming obsolete due to bulk and power supply requirements, and transistors are taking over the job for mobile or portable service. No attempt will be made in this handbook to cover the mobile field since it rates an entirely separate discussion of its problems and designs.

Fixed station receivers nearly all use a good communications type receiver as the i.f. system with separate converters for each VHF band. Here a receiver must have good frequency stability and should have variable bandwidth to allow reception of c.w. or phone signals. In case an amateur is only interested in local "rag-chewing," a mobile type receiver, or economical small communications receiver with converters of simple design, will be desirable. For difficult receiving conditions, much better equipment is needed and good commercially built receivers in the price range of $200 to $600 are used as tunable i.f. systems with crystal controlled converters in the front end. A few amateurs, myself included, still build very elaborate tunable i.f. systems with sharp mechanical or crystal band-pass systems which are at least equivalent to the better made commercial communications receivers. Since all radio locations, even on a hilltop, become difficult

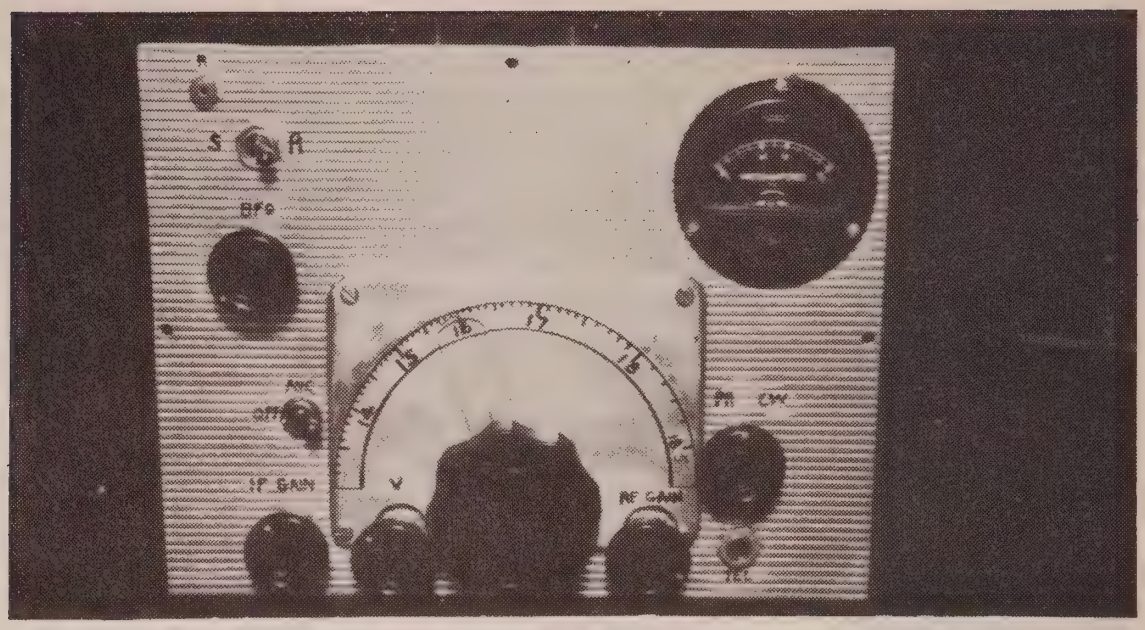

Fig. 7.1—Front panel of a tunable i.f. receiver built for use on the 432 and 1296 mc bands. The controls are, on the bottom from left to right, I.F. GAIN, AUDIO GAIN, TUNING, R.F. GAIN, audio output jack. Above the jack is the PHONE-CW switch. On the left side of the panel, from top to bottom, is connection for external relay, SEND-RECEIVE switch, B.F.O. INJECTION LEVEL and A.V.C. ON-OFF. The tuning dial is homemade as explained in the text.

locations for certain VHF bands or over some paths, serious thought should be given to a very good converter system and to a very good i.f. system. Sooner or later local "rag-chewing" palls and some DX becomes very interesting.

In selecting a tunable i.f. system several factors enter besides costs. The receiver must have a good dial for ease of tuning over the wide VHF bands. Accurate frequency markings on the dial are extremely useful in all VHF reception since most converters are crystal controlled and the VHF band frequencies may easily be translated to those marked on the i.f. receiver dial. A great many amateurs prefer the 14 to 18 mc tuning range in the i.f. system. Others prefer the 26 to 30 mc or higher bands for the i.f. As the i.f. goes up, so does frequency stability trouble. Therefore, an i.f. above these ranges means extra care in the design of the i.f. receiver tuning oscillator and dial. Higher i.f. systems mean less spurious signals in the amateur band from other transmitted signals in the image frequency band. The image frequency is always the response point equal to double the following i.f. amplifier pass band frequency as applied to the VHF band. For example, an i.f. receiver set at 15 mc being used to receive a 145 mc signal will have an image response 30 mc above (tuning oscillator on high side) 145 or at 175 mc. The converters must have enough selectivity to eliminate the image signals. While 40 to 60 db of image rejection may be satisfactory in the lower frequency amateur bands, at VHF, from 60 to 100 db rejection is needed in most locations. The i.f. receiver has one or two conversions of its own and the internal image rejection should be as high as possible, which means from 50 to 60 db for nearly all commercially built receivers. If higher values are needed in some locations, it may mean the job of building your own i.f. receiver with more i.f. transformers, more r.f. tuned circuits, etc., than in the receivers already available.

The i.f. conversions should not have too large a change in frequency in each mixer and its associated i.f. system. A five to one change down in frequency means two or three tuned circuits of reasonably high Q, and will provide enough image rejection with respect to the following i.f. channel. When the frequency change is as much as ten to one or more, added tuned circuits are needed. For example, three double tuned i.f. transformers would not accomplish good results. At least five or six i.f. transformers would be needed if the Q of each circuit was rather low as in most high frequency i.f. transformers. This might be the case of a 50 to 54 mc tunable i.f. receiver with an 8 or 10 mc first i.f. of its own, into a 455 kc i.f. system. The 910 kc image signal response falls within the VHF bandwidths so other strong amateur signals may cover up weak desired signals. This image should be suppressed to unusually low values in the 8 or 10 mc i.f. system.

A recent trend in receivers is to use less conversions of frequency and build a good high frequency i.f. amplifier working directly into the audio recovery detector. These i.f. amplifiers often use band-pass crystal filters in the 2 to 10 mc range having band-passes of 200 cycles or so for c.w. work and 3 kc or so for phone reception.

7.1 A 14 to 18 MC I.F. Receiver

The tunable i.f. receiver shown in figs. 7.1, 2, 3 and 4 was built primarily for use on the 432 and 1296 mc bands, but is usable on any of the VHF

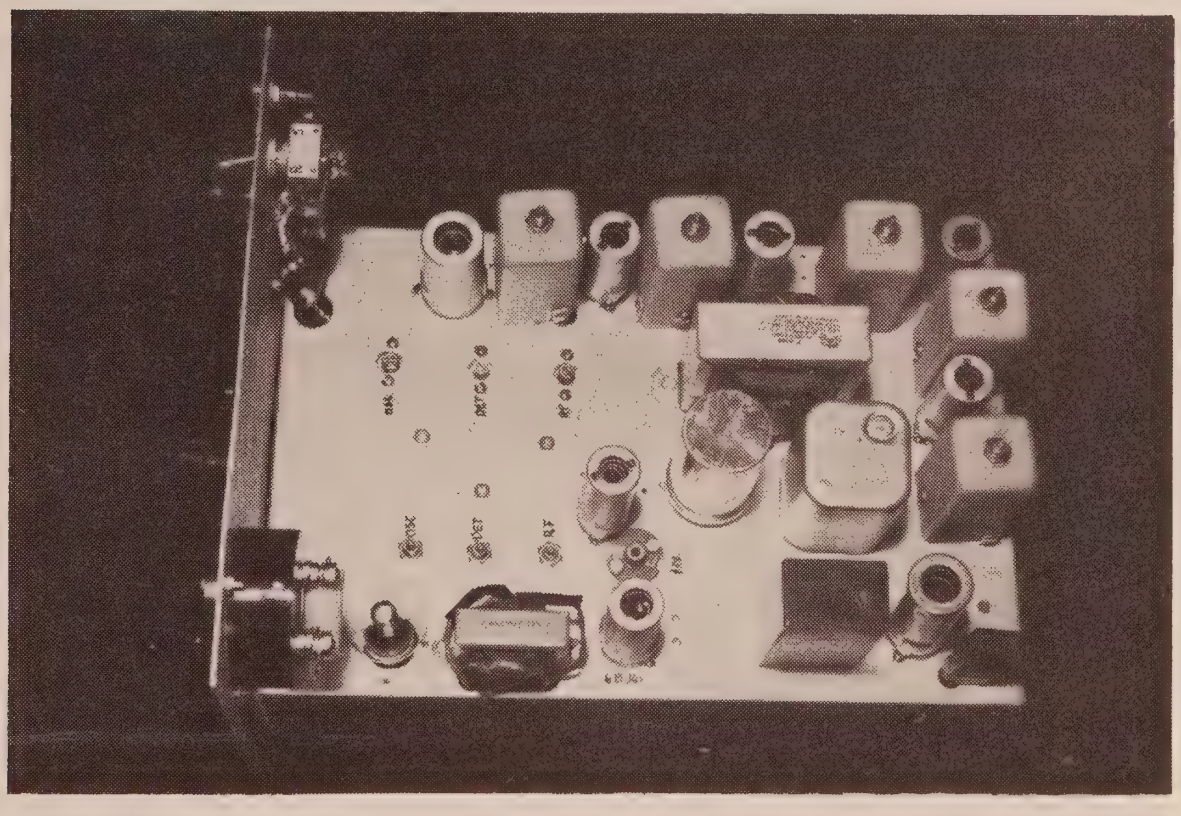

Fig. 7.2—Top view of the tunable i.f. receiver. The 1 watt neon bulb used to regulate the local oscillator is at the bottom left. To the right is the audio output transformer. To the right of the electrolytic capacitor is the filter choke and above the capacitor is the power transformer. The i.f. strip starts from the upper left corner and runs around the edge of the chassis. The b.f.o. crystal is located in the lower right corner.

bands with the converters described in Chapter 6. The receiver does not have a very sharp i.f. channel for short distance c.w. reception although it works well for that purpose since it has a crystal controlled b.f.o. and audio c.w. filter.

Low current tubes were used throughout as shown in fig. 7.4 in order to keep within the ratings of a small silicon rectifier power transformer. The latter was rated at 50 ma load and 2 amperes for the 117 v.a.c. and 6.3 v.a.c. windings, respectively. The d.c. plate voltage is approximately 125 volts under load with a 150 ma silicon 400 p.i.v. rating rectifier and filter circuit. This type of power transformer is made with a 117 volt secondary winding to isolate the a.c. line from the load circuit. If a polarized line plug is used, this transformer could be eliminated and only a simple 6.3 volt filament transformer would be needed for the tube supply with the same rectifier and plate filter system as shown. The transformer, as shown, eliminates the need of worrying about which side of the a.c. line is "hot" with respect to ground.

The receiver was made on an 8 × 12 × 3 inch chassis with bottom cover for added shielding. A heavy piece of aluminum approximately 8 × 10 inches was used for a front panel in order to slip the receiver into an old surplus cabinet with an opening of that size. The advantage is that not much space is required on the operating table and several i.f. receivers of other designs can be stacked within tuning reach on an ordinary desk or table. The vernier dial is made from a surplus dial drive unit and a scrap piece

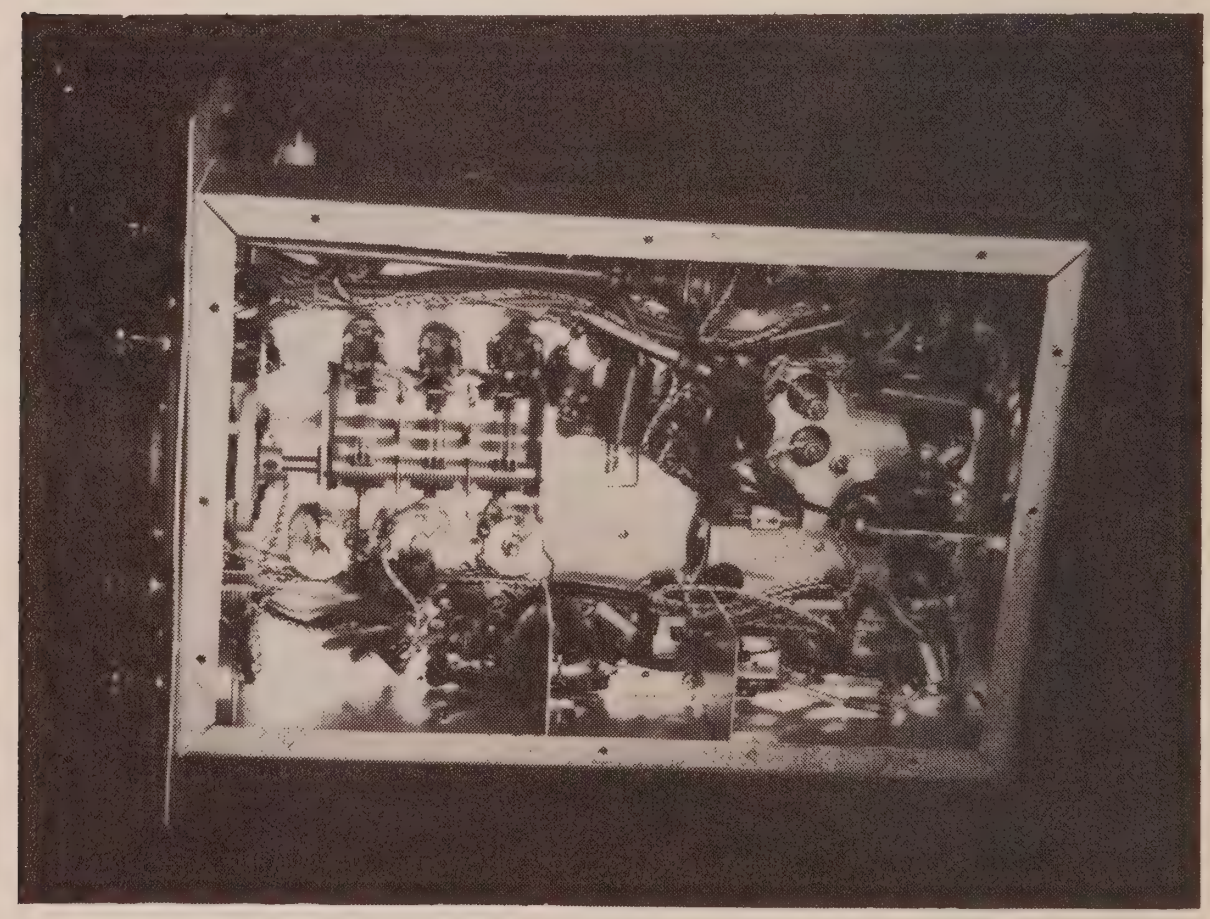

Fig. 7.3—Bottom view showing planetary drive and 3 gang tuning capacitor. The air trimmers are located below the capacitor. The silicon clip-in rectifier is located near the filter choke terminals in the center of the chassis.

of aluminum in order to have a hand calibrated scale as shown in fig. 7.1. Some labor could be saved by using a small vernier dial drive which is available as a complete unit.

The tunable i.f. system makes use of a Miller three gang double-spaced variable capacitor to cover from 13.5 to 18.5 mc for a little overlap on each end of the 14 to 18 mc range. This capacitor has a capacity range of from a little under 10 mmf up to about 25 mmf. Small air trimmer capacitors are mounted along the side of the gang capacitor and the slug coils on the opposite side. The r.f. coils each have 16 turns of number 22 enameled wire on a ½ × ½ inch form with iron tuning slugs. The oscillator coil is similar but wound with 11 turns of number 20 enameled since it tunes about 4.5 mc higher in frequency than the two r.f. coil circuits. The second i.f. system at about 4.5 mc is then laid out around the edge and rear of the chassis with the audio system along the opposite edge. Several i.f. stages at 4.5 mc with low gain per stage provide a better selectivity characteristic than could be obtained with two high gain stages.

The circuit in fig. 7.4 shows a few unorthodox design ideas. The two tuned r.f. circuits are grouped into the plate circuit of a grounded grid stage in order to eliminate some shielding problems and still get the tunable selectivity as high as possible. The 6BJ6 tube was found to be about equal to other tubes as a grounded grid tube with normal bias and screen voltage at these frequencies. A grounded grid r.f. amplifier usually is less subject to the evils of cross modulation from a strong signal when the stage is operated at full gain, and it also provides a wide band input termination for any VHF converter connected to it. The noise figure is better in this circuit arrangement since it isn't necessary to apply a.v.c. voltage to this tube and it functions at full gain at all times.

The tuning oscillator uses half of a 12AT7 dual triode in a stable oscillator circuit in which tube interelectrode capacities have little effect. Voltage stabilization at about 50 volts was accomplished by means of a one watt neon bulb used in a manner similar to v.r. regulator tubes. This oscillator tracks well at a frequency 4.5 mc higher than the r.f. circuits when the slug coils, shunt trimmer and series trimmer capacitors are set correctly. This is done by means of a grid dip oscillator before the receiver power supply is turned on but with all tubes in place. The tuning range of a little over 4 mc is helped for vernier tuning by a small 15 mmf variable capacitor across part of the oscillator circuit. This control on the front panel permits a few kc of oscillator frequency variation as an added vernier control when tuning the receiver.

Two 1N52 crystal diodes, with good front to back ratio of resistances, were chosen for the second detector and noise limiter. If the back resistance is extremely high a series limiter circuit may be used, but in general it is better to use a shunt type limiter such as the one in fig. 7.4 when using crystal diodes rather than tube diodes. The former have no heater hum problem and this isn't easy to solve with tube diodes. Another 12AT7 dual triode serves as an audio amplifier and crystal b.f.o. The crystal should be chosen to be at or near one edge of the 4.5 mc i.f. pass band. A 100,000 ohm

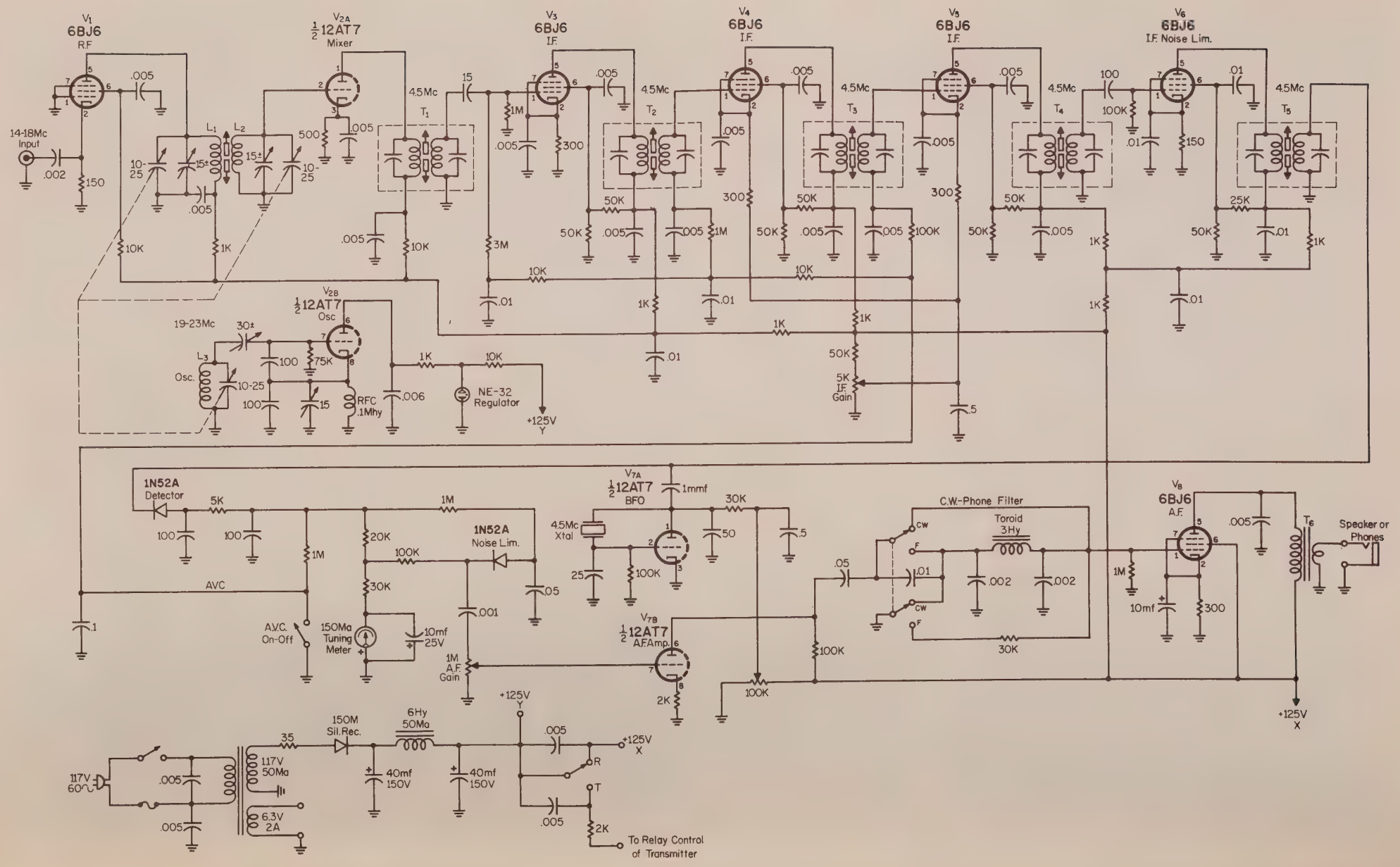
V1
6BJ6
R.F.
V2A
½ 12AT7
Mixer
V3
6BJ6
I.F.
V4
6BJ6
I.F.
V5
6BJ6
I.F.
V6
6BJ6
I.F. Noise Lim.
14-18Mc Input
.002
150
.005
10K
1K
10-25
15±
L1
L2
500
4.5Mc
T1
T2
T3
T4
T5
15
1M
300
3M
.01
50K
100K
100
25K
V2B
½ 12AT7
Osc
19-23Mc
30±
L3
Osc.
75K
RFC .1Mhy
.006
NE-32 Regulator
+125V Y
5K I.F. Gain
.5
1N52A
Detector
20K
30K
AVC
A.V.C. On-Off
150Ma Tuning Meter
10mf 25V
.001
1N52A
Noise Lim.
.05
1M A.F. Gain
V7A
½ 12AT7
BFO
1mmf
4.5Mc Xtal
25
50
V7B
½ 12AT7
A.F.Amp.
2K
C.W.-Phone Filter
Toroid 3Hy
CW
F
.002
V8
6BJ6
A.F.
10mf
T6
Speaker or Phones
+125V X
117V 60~
117V 50Ma
6.3V 2A
35
150M Sil.Rec.
6Hy 50Ma
40mf 150V
R
T
To Relay Control of Transmitter

Fig. 7.4—Tunable i.f. receiver circuit designed for use in the 432 and 1296 mc bands (opposite page). The input is from 14 to 18 mc with an i.f. of 4.5. mc. A c.w.-phone filter is part of the audio amplifier. Coupling between the oscillator and mixer is by stray capacity and inductance.

L_1—16t #22E ½" long, ½" diam. iron slug.
L_2—16t #22E ½" long, ½" diam. iron slug.
L_3—11t #20E ½" long, ½" diam. iron slug.
$T_{1, 2, 3, 4, 5}$—4.5 mc i.f. transformers, slug tuned.
T_6—Output transformer 50:1.

potentiometer across the B + supply provides a means of turning the b.f.o. on and off and adjusting the injection voltage into the detector diode for best c.w. operation.

A high *Q* inductor of 3 henrys (a toroid) is used in a 3000 c.p.s. low pass audio filter to reduce tube noise for phone reception. By connecting this circuit and a couple of added small parts to a dpdt switch, the 3000 cycle low pass filter can be changed over to a sharp 1000 cycle tuned circuit for c.w. reception. Even an ordinary 10 henry choke, with a larger air gap to reduce its inductance to 3 henrys, will function in this circuit but the high Q toroidal coil is better.

The second a.f. amplifier has another 6BJ6 tube in it in order to make use of only two tube types in the receiver. The audio output into a loudspeaker voice coil was measured at 400 milliwatts, enough for modest loudspeaker volume in the radio room. Headphones may be plugged into the output jack in place of a voice coil of a loudspeaker for headphone operation with no other changes.

The tuning or S meter is a 150 microammeter in series with the second detector diode resistors to ground. This in effect measures the a.v.c. voltage but not being in the slow time constant part of the a.v.c. system, a 10 mf 25 volt electrolytic capacitor is connected across the meter to slow its movement down. Some highly damped meter movements do not require this treatment.

A signal generator is used to align the complete receiver and to calibrate the dial. The image and spurious signal rejection measures at more than 50 db down from the desired signal. This, together with a little rejection at these i.f. values offered by the converter external to the receiver, makes it usable in most locations. The total bandwidths at 20, 40 and 60 db down were measured at 50 kc, 90 kc and 140 kc respectively, which indicates moderately good selectivity at this fairly high i.f. when no crystal band pass filters are incorporated into the design.

7.2 A.F. Filter

The sharp band-pass filter shown in fig. 7.5 is a useful accessory for weak signal c.w. reception on any amateur band. It can be used to separate stations in case of QRM conditions and to reduce receiver noise. The latter is always a factor at VHF and by narrowing the receiver bandwidth either in the i.f. or in the a.f. system, a better signal to noise ratio becomes possible. The unit shown here is actually five over-coupled tuned circuits, which is easier to build than a complex band-pass audio filter. The toroid coils are each 88 millihenrys and were recovered from junked telephone company "loading pots." The 5 toroids are wrapped in a tin container (see fig. 7.5 filter unit) which can be used in that form. A unit of 5 coils

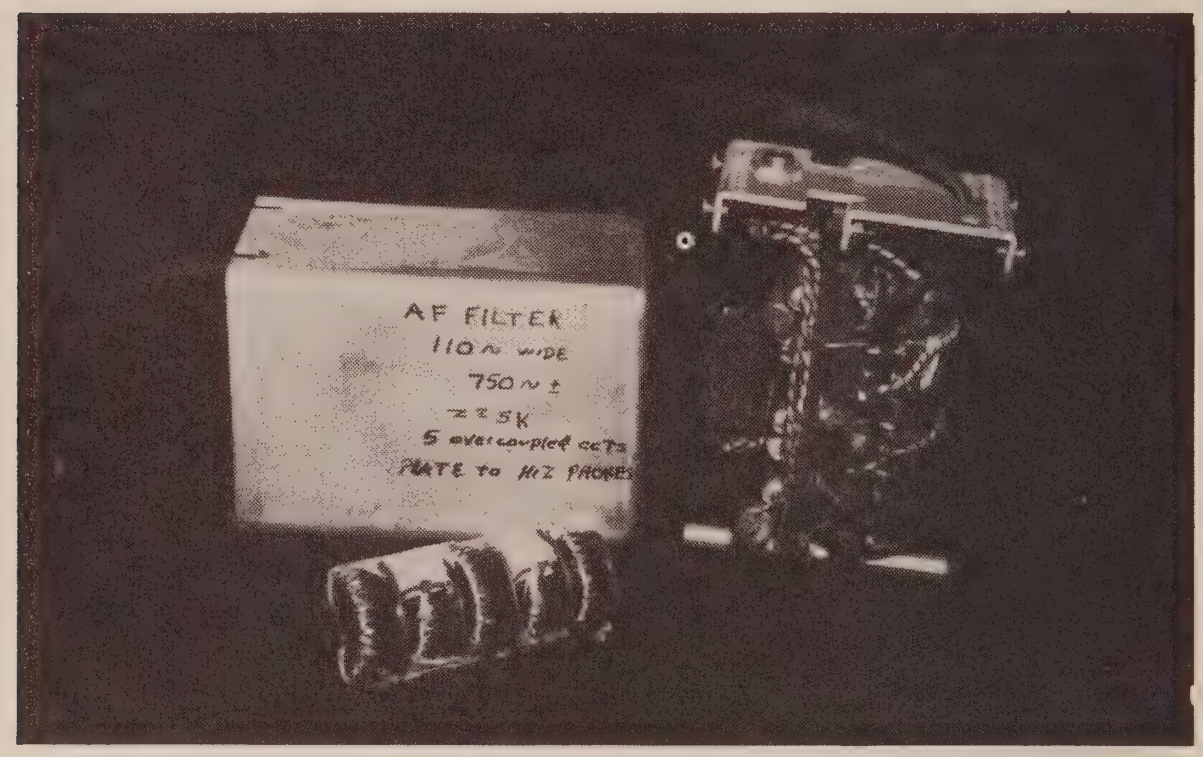

Fig. 7.5—C.w. filter and set of toroid coils. The toroids in the filter are wrapped in a tin container for shielding. The filter is useful for reducing receiver noise by narrowing the bandwidth.

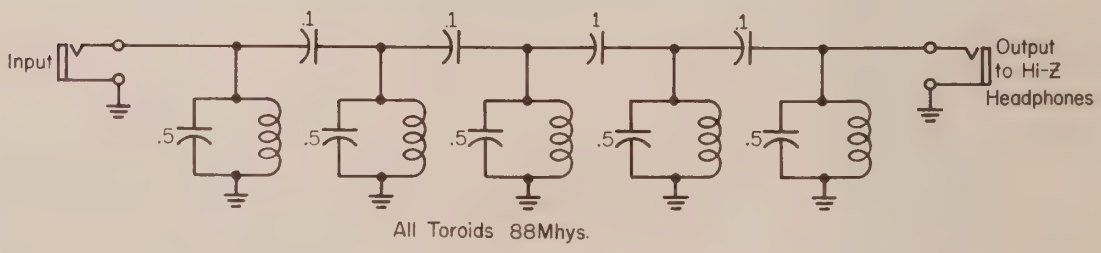

Fig. 7.6—Circuit of the c.w. filter consists of 5 overcoupled tuned circuits. The filter is connected to a high impedance phone jack or to the voice coil through a voice coil to plate transformer.

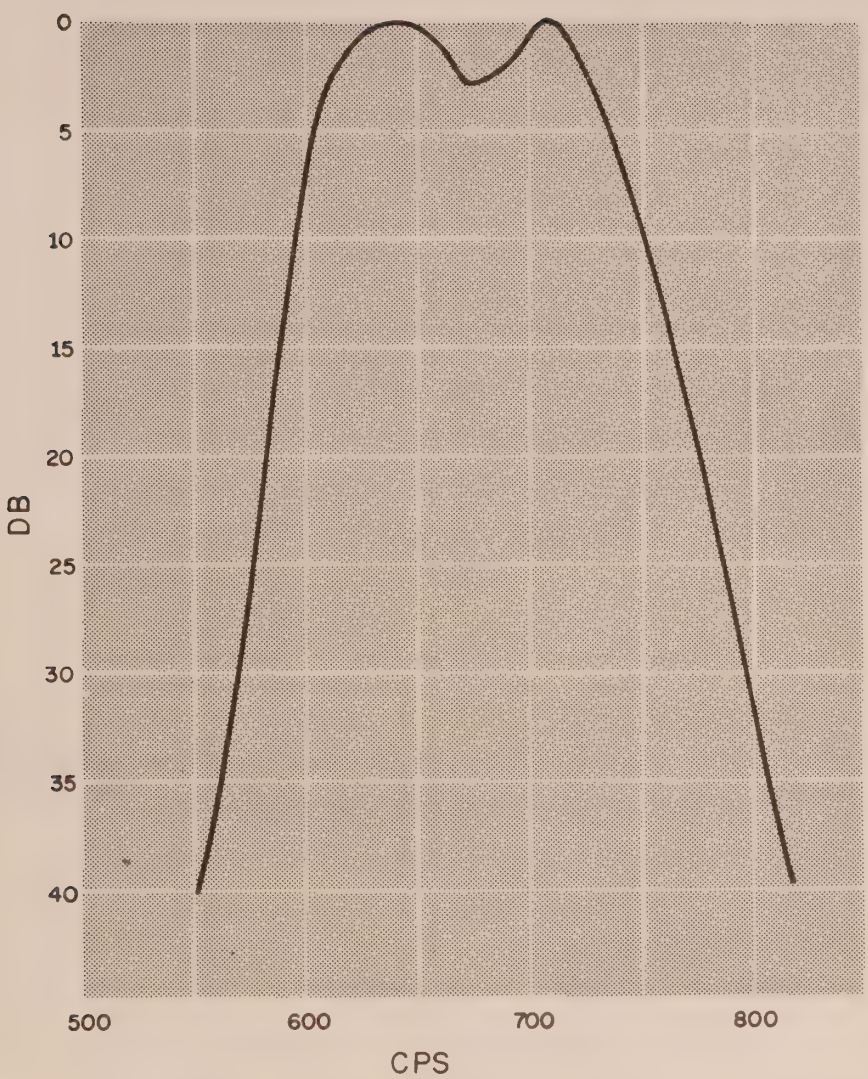

Fig. 7.7—Response curve of the sharp band-pass c.w. filter shown in figures 7.5 and 7.6. This curve is the result of using coupling capacitors of 0.1 mf value and the curve centers on 675 cycles. The bandwidth may be controlled by changing the values of the tuning capacitors. They may be staggered to acquire a width of 200 cycles with a flatter topped characteristic or if carefully matched and of the correct value reduce the width to as little as 50 cycles. The toroids used are from an old telephone company "loading pot".

with can removed is shown in the foreground. Some sets seem to have about 44 millihenrys of inductance. Either can be used by changing the capacitor values. All of the capacitor values in fig. 7.6 should be doubled for 44 mh toroids.

The filter functions best between impedances of around 2000 ohms but with so many over-coupled tuned circuits, the selectivity characteristic is not affected greatly by use in lower impedances. The loss through it will be greater but this usually isn't important. Filters having bandwidths of from 50 to 200 cycles can be built by varying the size of the coupling capacitors and by a slight stagger tuning of the shunt tuned circuits. In this case capacitors ranging from .4 to .6 mf would stagger tune the circuits. The toroids actually have two windings in this size and these should be connected in series aiding to get as much inductance as possible. The curve shown in fig. 7.7 is for the unit illustrated in fig. 7.5. Capacitor values were all

matched. Probably a flatter top characteristic could be obtained by not using matched capacitors since 10 per cent tolerance capacitors would provide a little stagger tuning effect also.

8

Preamplifiers

LONG distance reception in the VHF bands generally requires a receiver with a very low noise front end. The external noises are often masked out by the receiver noise itself. The internal noise at 50 mc is nearly always below the external and atmospheric noises, provided a good converter is used. At higher frequencies the reverse is true with the converter noise being the main factor. In such cases a low noise type of r.f. preamplifier is useful ahead of the converter unit.

Preamplifiers take two main forms in the 144 and 220 mc bands. One is a tube amplifier which can be designed to cover the whole wide band without much loss, if any, in noise figure within the capabilities of the tube. A 416B grounded grid triode stage has been the amateur's ultimate goal in this respect. Recently a new form of narrow band amplifier has been developed which has a much lower noise figure that the 416B amplifiers. In this range of operation the band width of these new parametric diode amplifiers is from 100 to 200 kc, only a small segment of the amateur bands. This disadvantage limits their use to a particular spot or narrow band within the amateur bands. Both types of amplifiers are useful, each for its particular merits.

8.1 416B Preamplifier

A 220 mc band preamplifier with a 416B tube is shown in figs. 8.1 and 2. This amplifier has a noise figure of between 3 and 4 db over most of the 220 to 225 mc band and has more gain than other tubes which will function at this frequency. The amplifier and its simple selenium rectifier power supply is built on a 4 × 8 inch plate which mounts on a 4 × 8 × 2 inch aluminum chassis. The 416B tube is mounted upside down with its grid clamped to the 4 × 8 inch plate by means of a ¾ inch nut with 40 threads per inch. The r.f. cathode shell is shielded to some extent by an aluminum coil shield with its cover cut off. This open top permits convection cooling of the tube. If the heater current is adjusted to as low a value as possible for good low noise operation of the r.f. stage and low plate voltage is applied, no forced air cooling is needed. Low plate voltage of 100 to 125 volts doesn't mean a loss in noise figure if the bias is reduced so the plate current is around 10 milliamperes or more. The G_m of this tube can be run up to 20,000 or even 30,000 in this manner and nf results are comparable to the more normal method of operation at 20 to 25 ma and higher plate voltage.

The plate circuit of the 416B tube is underneath the chassis plate. In the unit shown in fig. 8.2, this consists of a small coil tuned by the tube capacity and a piston type adjustable capacitor. For broadband operation, the output link coil has to be tightly coupled part way up the tuned plate coil. A slug tuned plate coil could be used with equal results.

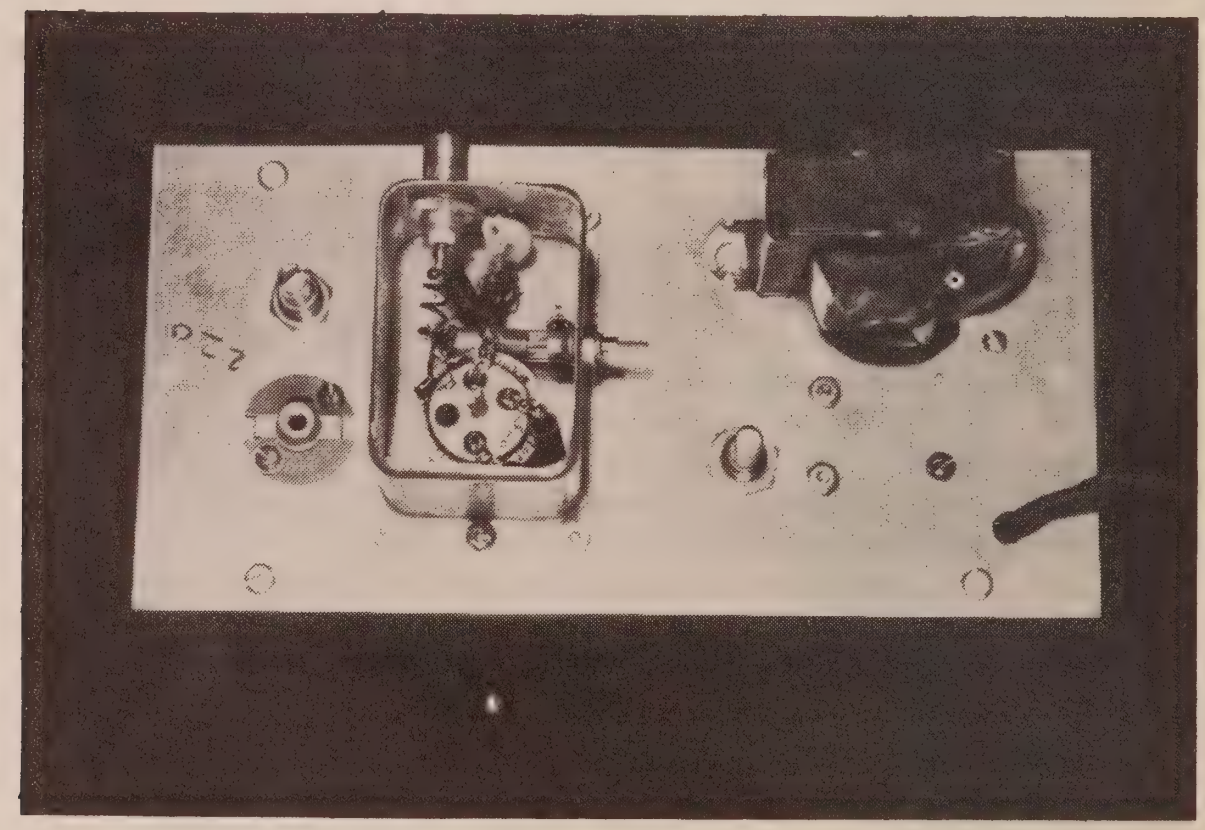

Fig. 8.1—Top view of a 220 mc preamp using a 416B. The input jack is mounted on the shield can and the output jack is on the chassis plate to the left of the shield can. Above the output jack is the 3K plate pot shaft. The filament pot is on the right below the power transformer.

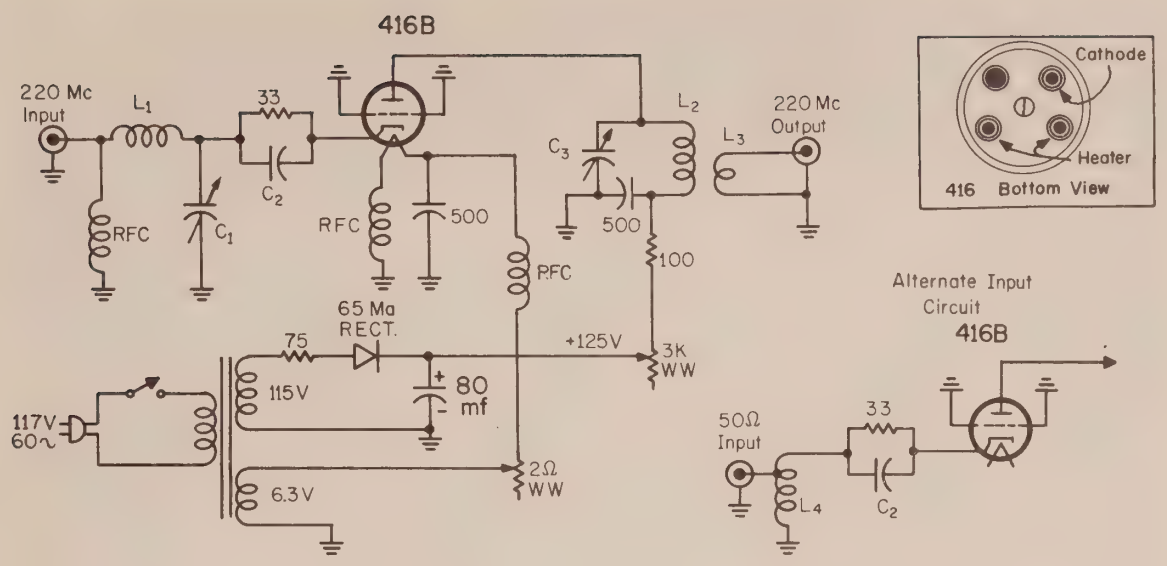

Fig. 8.2—Circuit of a 220 mc preamp using a 416B. An alternate input circuit to reduce Channel 13 interference is shown. A bottom view of this preamp is shown on the next page.

C_1—1-10 mmf piston capacitor.
C_2—Internal capacitor.
C_3—1-10 mmf piston capacitor.
$C_{4,\ 5}$—500 mmf.
C_6—80 mf, 150V.
L_1—4 turns, #20E ½" long, ¼" diam.
L_2—4 turns, #20E ½" long, ⅜" diam.
L_3—1 turn link, close coupled.
L_4—3 turns #18E ⅜" long, ¼" dia. Adjust turns spacing for best nf.
R_1—33 ohms.
R_2—100 ohms.
R_3—3K wirewound.
R_4—75 ohms.
R_5—2 ohms wirewound.
RFC—14" of #20E ⅛" diam., wound into r.f. chokes.

The cathode circuit is an "L" matching network for connection to the 50 ohm coaxial fed antenna. The alternate circuit shown in fig. 8.2 will provide equal results and less cross-modulation effects in locations near Channel 13 TV transmitters.

The same amplifier can be built for 144 mc band operation by increasing all coil turns by 50% for the same diameters as those in the 220 mc unit. This type of amplifier is very useful on either band in station locations which are shadowed by hills or mountains, or for any location when the operator is after some elusive DX reception.

8.2 Parametric Amplifiers

Parametric diode amplifiers are suitable for use by amateurs in any of the VHF and UHF bands. These units may even offer some advantages at 50 mc but in general are more beneficial as the frequency of operation is is moved upwards. The bandwidth is relatively narrow, being 300 to 500 kc

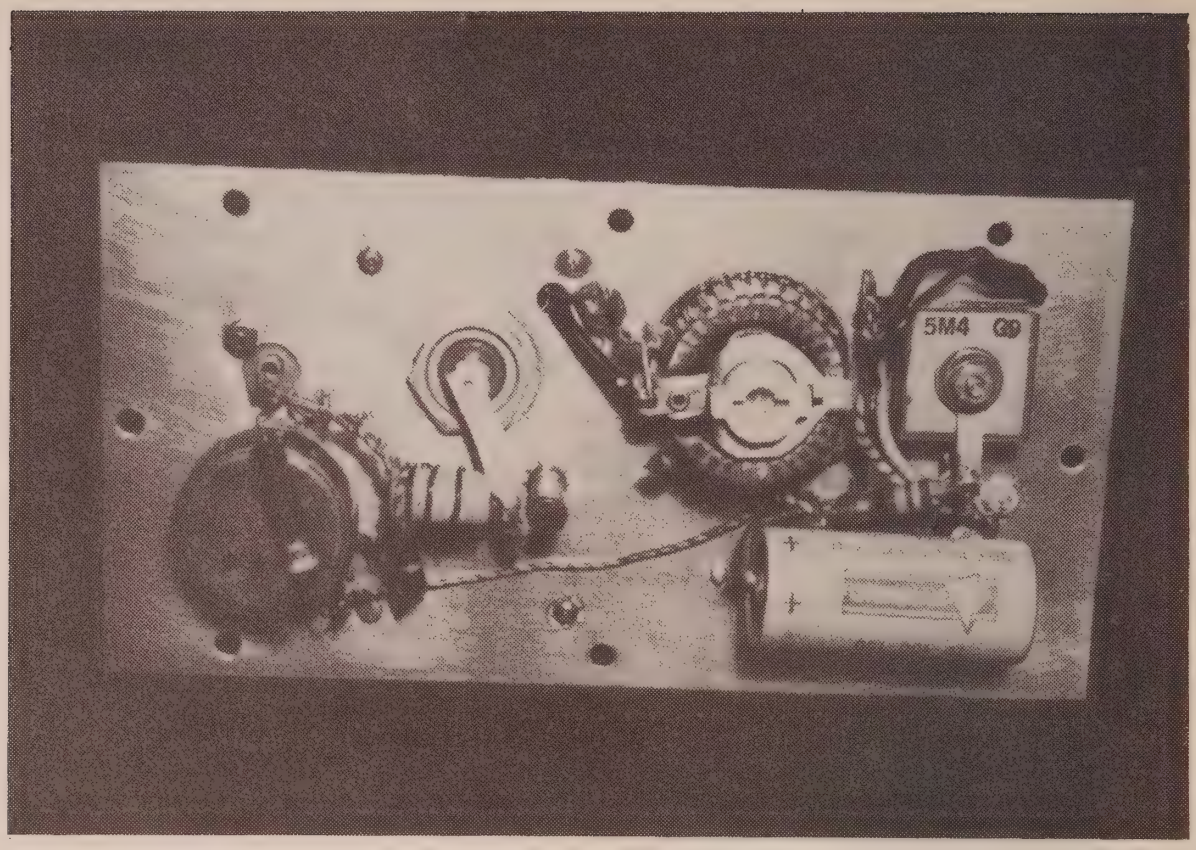

Fig. 8.3—Bottom view shows the 4 turn plate coil to the right of the 3K pot. The close coupled output link is on the left end of the coil. The power supply components and filament pot are on the right.

in the 432 mc region and about 100 kc at 144 mc. The amplifiers are difficult to adjust to new portions of an amateur band, so would probably be used only for long distance work or in difficult receiving areas where the operator is interested in only a narrow portion of the amateur bands. As the state of the art advances, new designs may widen the bandwidths and greatly simplify the adjustments, making these amplifiers more popular than tube amplifiers.

The parametric amplifier consists of a special high Q low capacitance diode connected across a high Q signal frequency tuned circuit. When the diode is driven by a higher frequency "pump" oscillator, it can be made to oscillate itself or to provide regenerative amplification at the signal frequency. To accomplish this purpose careful adjustments are necessary. Basically the block diagram in fig. 8.4 applies to all "simple" parametric amplifier systems. A pump oscillator at a great deal higher frequency than the signal frequency is needed to drive the diode as a variable capacitor and negative resistance generator. The negative resistance effect produces amplification of the desired signal through the signal tank or LC circuit, on into a VHF or UHF radio receiver.

In the block diagram of fig. 8.4 a tank circuit is shown for an idler frequency. The pump oscillator heterodynes the signal frequency into two idler frequencies, one of which is used in "up converter" systems and the other in the parametric amplifiers shown in this chapter. The idler frequency between the pump frequency and the signal frequency must have a dissipative tank circuit resonant at this frequency in order for the system to work as a regenerative low noise amplifier. Unlike regenerative tube amplifiers,

these diode amplifiers are nearly noise free and noise figures of 1 db or so are obtained. "Up converters" have a little higher noise figure.

The pump oscillator has to supply a few milliwatts of power to the parametric diode in the VHF bands. At microwave frequencies, losses go up and apparent pump power may be 100 or 200 milliwatts. It can be a free running oscillator, not crystal controlled, since some drift or instability can be tolerated without affecting the diode operation. The frequency must be steady enough to keep the lower idler frequency within its working range of resonance in the idler tank circuit. Since this is a regenerative system, the pump oscillator should have an adjustable output which will stay constant at the desired level. The frequency must be adjustable in order to find the idler tank resonance, since the idler and signal frequencies generally use the same *LC* circuit, normally a coaxial tank circuit. The idler resonance frequency is not an exact multiple of the signal frequency for any practical tank circuit design due to the lumped capacities in the system. The signal frequency circuit is usually a shortened quarter wave electrical circuit which will have higher frequency resonances, one of which must be used for the lower idler frequency. If the pump oscillator can be varied over a wide range, a simple tank circuit with only one tuning adjustment can be made to operate at the signal frequency, and secondarily at the idler frequency. If the pump oscillator has only a narrow range of adjustment, then added tuning capacitors must be put on the signal tank circuit at suitable points for moving the "harmonic" resonances around enough to get the same parametric functions. This means compounded difficulties since all adjustments affect others and hours of adjustment time may be needed. The first parametric amplifiers built by the author were of the second type and were made to operate only by an extraordinary amount of patience, perseverance and profanity! Later designs tend to minimize the second or third requirements. Future designs may minimize all three requisites.

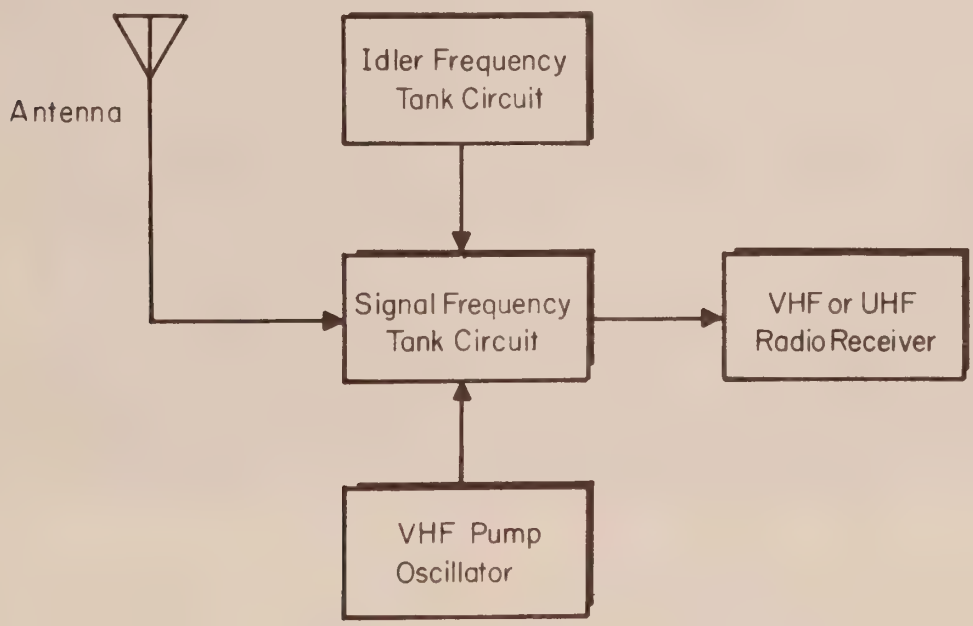

Fig. 8.4—Block diagram of a parametric amplifier.

8.3 Pump Oscillators

A necessary part of any parametric amplifier system is a suitable UHF oscillator of fairly good stability, adjustable output and preferably a wide frequency coverage. Figure 8.5 illustrates three types of pump oscillators used with various parametric amplifiers. The 1200 mc oscillator in the foreground of fig. 8.5 uses a 2C40 "lighthouse" triode and coaxial tank circuits with screw adjustment of lengths for frequency adjustment. This particular unit is built from a surplus radar r.f. amplifier stage by putting small S shaped feedback loops between the tuned cathode to grid cavity and the inside grid to plate coaxial cavity. The unit is used at ¾ wave oscillation by careful adjustment of the lengths of both coaxial circuits. A sketch of this oscillator is shown in fig. 8.6. Power is supplied to this unit or others shown here by a small power supply with a VR105 or equivalent regulator tube and a 10,000 ohm wire wound potentiometer across it to vary the oscillator plate voltage from zero to 105 volts. Changing the plate voltage controls the pump output power but also affects the frequency. This means two handed operation when adjusting the pump oscillator. The 1200

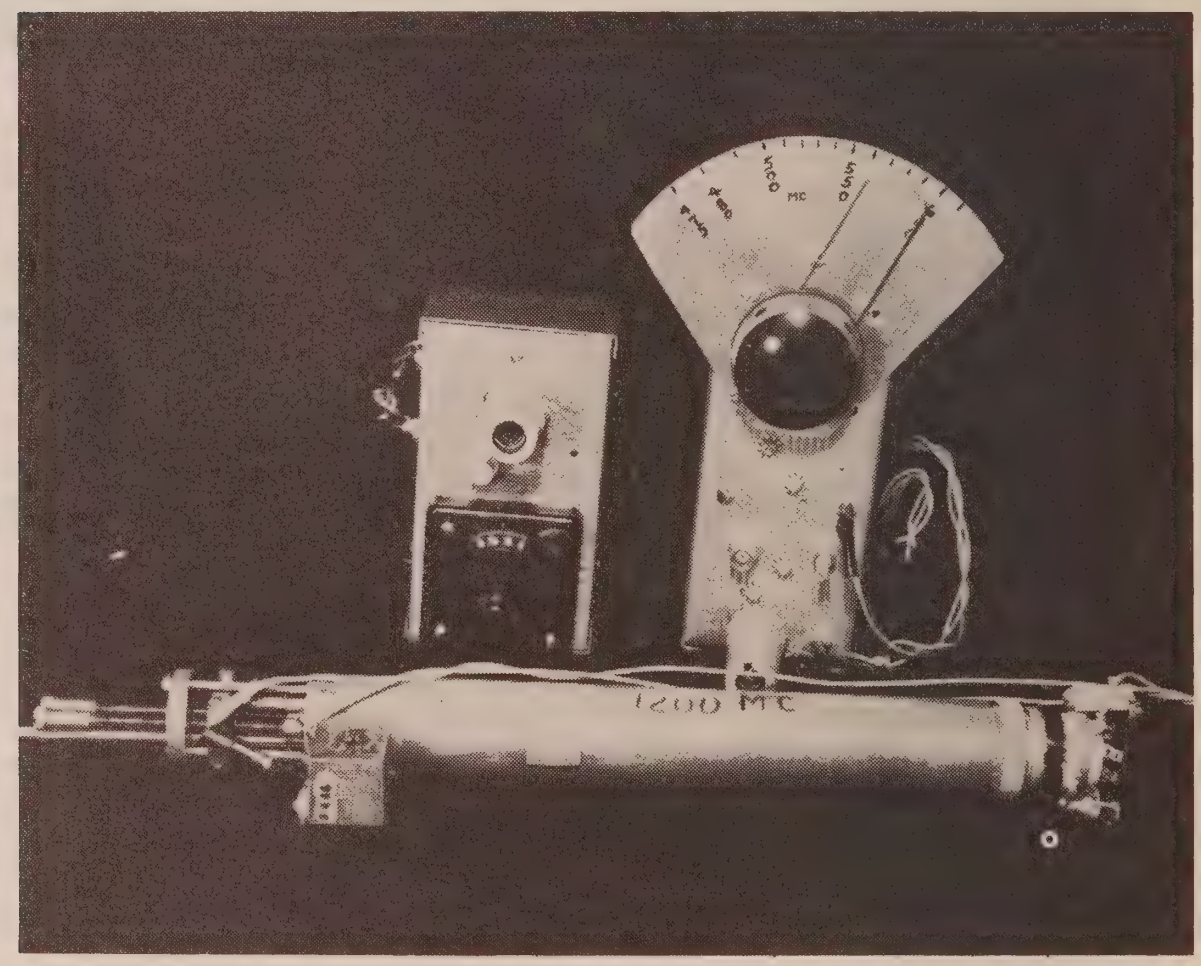

Fig. 8.5—Three "pump" oscillators for use with parametric amplifiers. The unit in the foreground is a 1200 mc oscillator using a 2C40 "lighthouse" tube and is built from a surplus radar r.f. amplifier. The two upright units in the rear are parallel plate oscillators that cover from 475 to 600 and 650 to 800 mc.

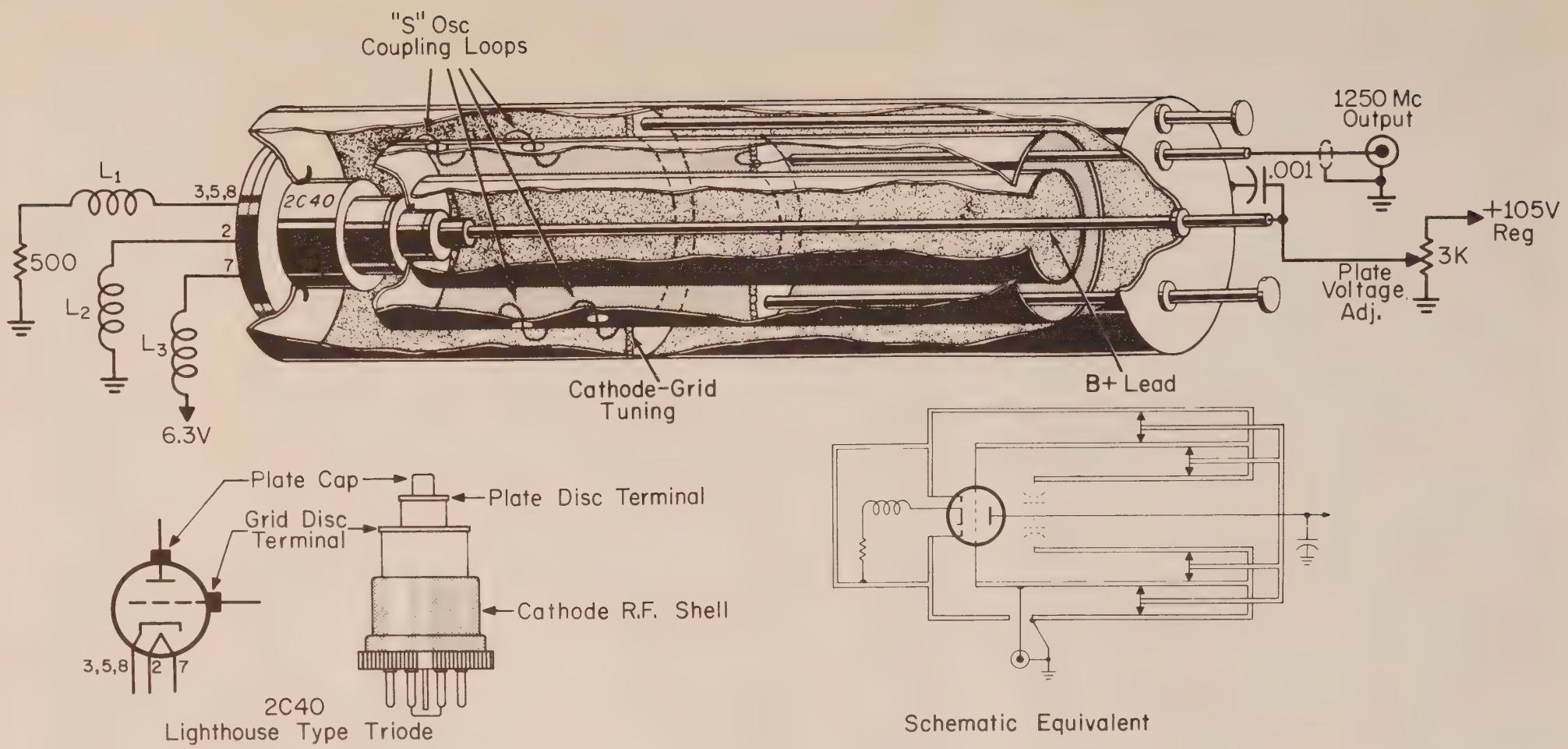

Fig. 8.6—Construction details and circuit diagram of the 2C40 coaxial line oscillator for use with a 432 mc parametric amp.

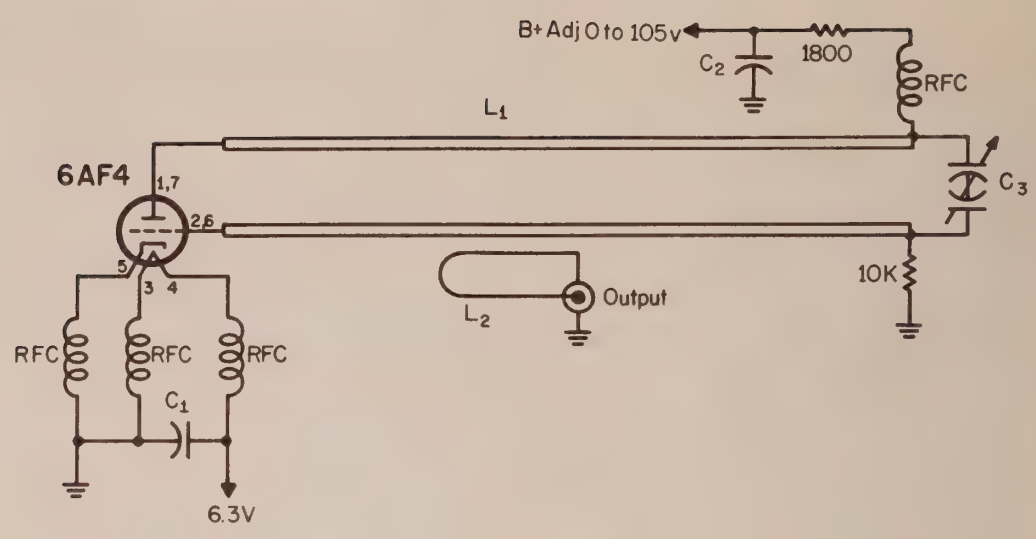

Fig. 8.7—Circuit of the 650 to 800 mc pump oscillator. The tuning range depends on the plate separation in the line and the capacity of the butterfly tuning capacitor, C_3.

$C_{1,\ 2}$—500 mmf.
C_3—5 or 7 plate butterfly capacitor (Johnson).
L_1—Parallel copper plates 3" long, 1" wide with about ¼" separation.
L_2—Rectangular loop, #22 hookup wire, ½" long, ¼" wide.
RFC—5" of #24E ⅛" diam. wound into r.f. chokes.

mc pump oscillator is suitable for certain designs of 144 and 220 mc parametric amplifiers.

The inconvenience of adjustment of this oscillator led to the construction of parallel plate oscillators of the forms also illustrated in fig. 8.5. These are similar in circuit design, differing in the parallel plate line length and spacing in order to cover different frequency bands. These two oscillators

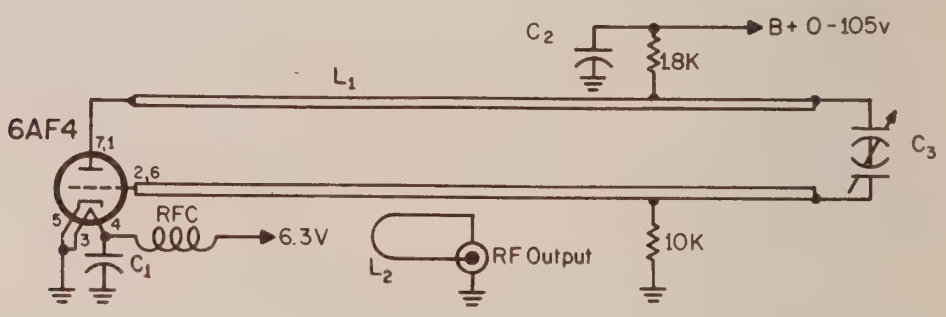

Fig. 8.8—Circuit of the pump oscillator with the tuning range of 475 to 600 mc. An interior view may be seen in fig. 8.16.

$C_{1,\ 2}$—500 mmf.
C_3—5 plate butterfly capacitor (Johnson).
L_1—Parallel copper plates 5" long, ¾" wide with about ¼" or less separation.
L_2—Rectangular loop, #22 hookup wire, ½" long, ¼" wide.
RFC—10 turns of hookup wire, 1/16" diam.

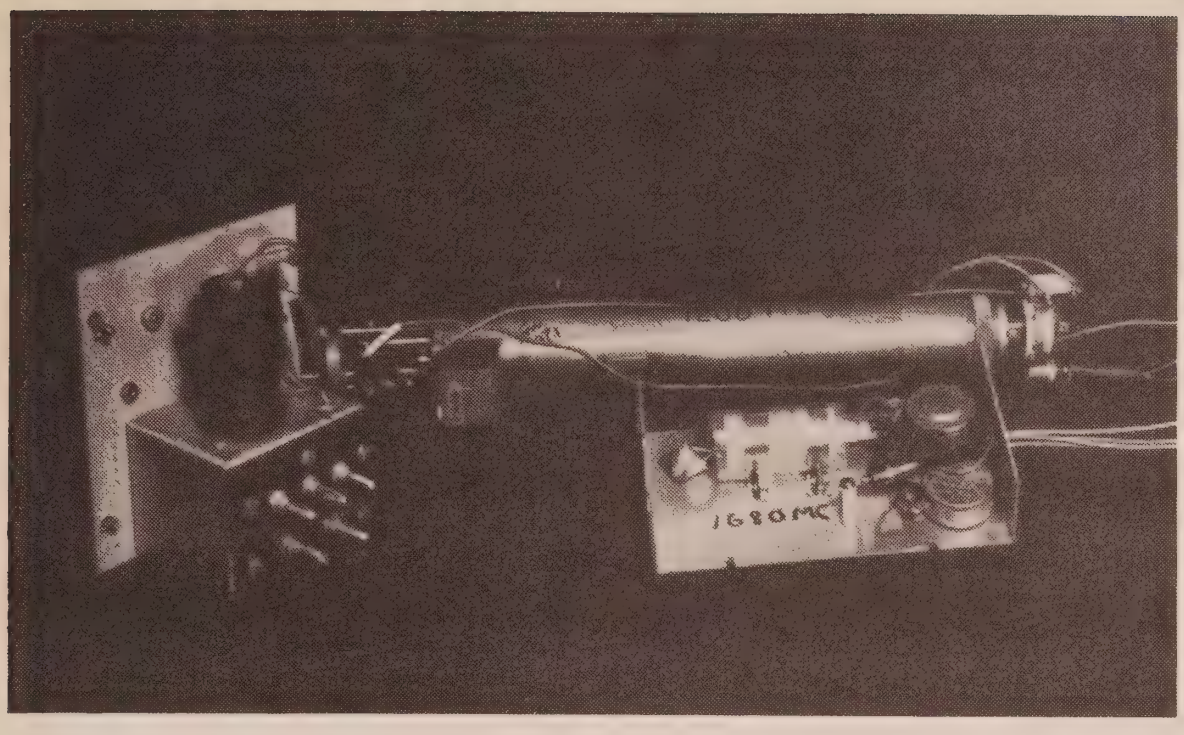

Fig. 8.9—A 3000 mc klystron pump oscillator is on the left. The oscillator in the right foreground is made from a surplus radiosonde unit, uses a 5794 pencil tube and operates around 1680 mc. The rear unit is the 2C 40 at 1200 mc previously described.

cover from about 475 to 600 mc and 650 to 800 mc, ranges which were used in various 144 mc amplifiers at W6AJF. The circuit details are given in figs. 8.7 and 8.

Some details of other pump oscillators of high frequency ranges are shown in figs. 8.9, 10 and 11. The left hand unit, fig. 8.9, is a 3000 mc klystron oscillator of marginal output power, since the split coaxial output lines cause a loss of power. With a little rebuilding, this klystron oscillator, as shown in fig. 10, would be more satisfactory for 432 mc amplifiers. However, these

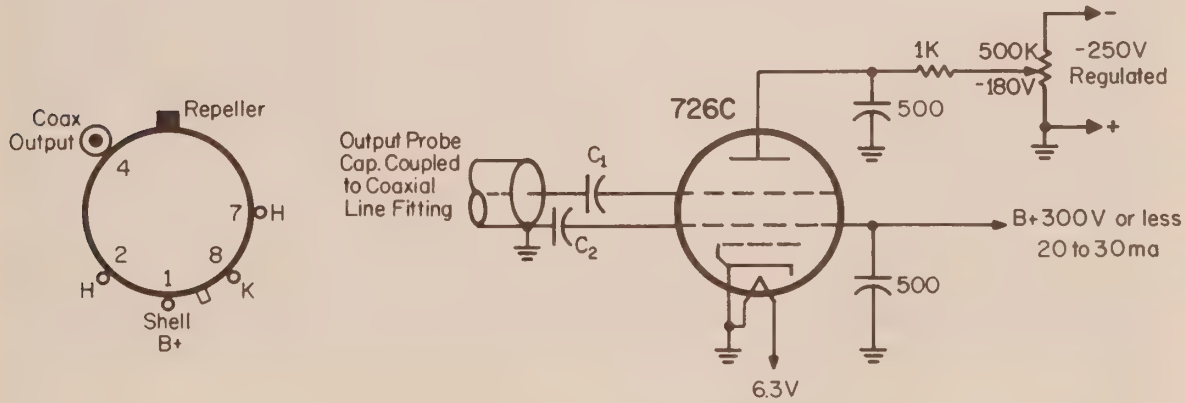

Fig. 8.10—Circuit and construction details of the 3000 mc pump oscillator. The output probe of the 726C should couple into the circuit as shown above. Capacitors C_1 and C_2 are sleeves over the tube output probe with plastic or teflon wrappers for d.c. insulation.

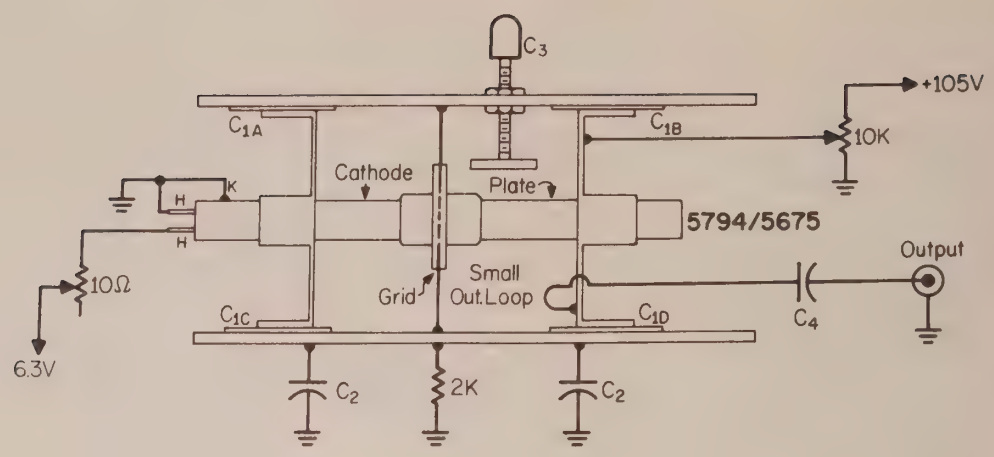

Fig. 8.11—Pump oscillator for 1600 to 1800 mc with about a 20 mc range available from the tuning disc in the plate cavity. The oscillator is made from a surplus radiosonde unit and employs a 5794 tube.

C_1—5 mil sheet Teflon under shell over cathode and plate sliders of cavity.
C_2—Capacity of straps used for mounting, insulated with plastic or Teflon sheet. Shell is connected to control grid internally.
C_3—Tuning disk, ¼" diameter.
C_4—500 mmf.

little klystron oscillators require a well regulated negative voltage supply of 0 to 200 or 0 to 300 volts for the repeller electrode and a positive voltage supply of 300 volts at 20 to 30 ma for the resonator. Some adjustment of power output is possible by varying this positive supply voltage but a more satisfactory arrangement is to attenuate the r.f. output power. In higher frequency klystrons connected to the parametric amplifier by wave guide line, attenuation can be varied by a slider in the end of the waveguide beyond the klystron antenna probe; that is, in the waveguide section opposite from the amplifier. Variation of resonant impedance, near some multiple of quarter waves, will vary the power into the waveguide section feeding the parametric diode with pump power.

The pump oscillator in the right-hand foreground of fig. 8.9 and circuit in fig. 8.11 is made from a surplus radiosonde unit with a 5794 pencil triode. This unit oscillator is complete with a double coaxial cavity, usable over a range of ± 12 mc from 1680 megacycles. It is possible to move the whole range about 100 mc by sliding the two ends of the cylindrical cavity in or out a little along the cathode and plate terminals of the tube. This may require some loosening of the cylinder surrounding the tube. The oscillator shown in the illustration was rebuilt with another 5794 triode and still another one was rebuilt with a longer-life 5675 pencil triode which has the same dimensions. When rebuilding, a couple of strips of 5 or 10 mil teflon sheet can be used to insulate the ends from the shell which is the grid connection. A larger wrap of nylon or plastic around the shell insulates the grid from ground, with the two mounting sheet metal clamps serving as r.f. bypass capacitors. The output coaxial line of the cavity is at plate potential so has to have a series capacitor in the center line (outer line already

bypassed to ground). This oscillator, reset to about 1620 mc, was used on several 432 mc parametric amplifiers.

The pump oscillator illustrated in figs. 8.12 and 13 was built with its own small regulated power supply with an 0B2 gaseous regulator tube across the 10,000 ohm potentiometer. The parallel plates in the oscillator circuit of fig. 8.14 are cut from sheet copper with one end of each bent out and soldered to a miniature butterfly tuning capacitor. The latter is mounted on a little piece of bakelite sheet in order to insulate the rotor from ground and to make space for a small shaft coupler to the vernier dial. The plate and grid leads of the 6AF4 tube socket are soldered to these oscillator lines near the other end with enough line extending beyond to glue into a polystyrene support to keep the line spacing at about ⅛ inch. This support consists of a ½ inch diameter poly rod with a couple of narrow saw slots ⅛ inches apart running lengthwise. The oscillator lines are slid into these slots and glued in place with coil "dope."

This oscillator tunes from 880 to 1120 mc with more than enough output for a 220 mc parametric amplifier described in a later section of this chapter. The parallel plate lines are approximately 3 inches long and 1 inch wide with some cutout to clear the capacitor mounting sub-panel. A small hairpin of hookup wire beneath these lines connects to the BNC coaxial output

Fig. 8.12—An 880 to 1120 mc pump oscillator for use with a 222 mc parametric amplifier. The self contained power supply is on the right with the 0B2 regulator under the shield and the 10K plate pot knob behind the filter can.

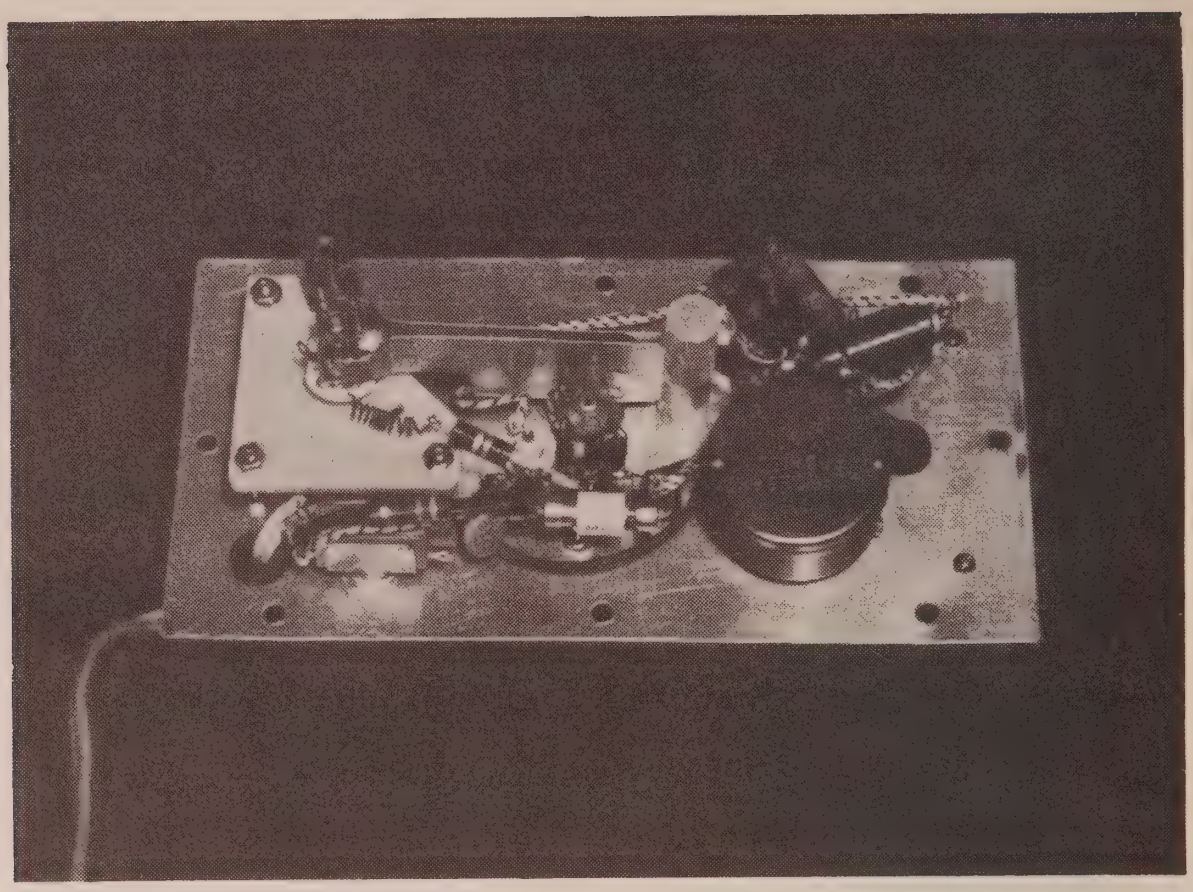

Fig. 8.13—The parallel lines may be seen connected to the butterfly capacitor on the left and wedged into the polystyrene rod on the right. The 6AF4 socket is just to the left of the polystyrene rod. The silicon rectifier may be seen in the lower center.

jack. This link is less than ¾ inch long and is ⅛ inch wide. The power supply is built in the 4 × 8 inch space with an 8 × 4 × 2 chassis acting as a mounting cover underneath the unit. Parts are crowded somewhat in order for this unit to match other units in size. The 6AF4A or 6T4 seven pin miniature triode will function well in oscillators from 300 to nearly 1200 mc in the parallel plate half wave circuits. Close spacing and shorter lengths are needed at the higher ranges and wide spacing with longer lines for the lower ranges. The miniature butterfly capacitor in the oscillator of fig. 8.14 has 9 plates. Some of the pump oscillators are built with 5 plate capacitors, which narrows down the tuning frequency range. This permits ease of adjustment from time to time, but has the disadvantage in the preliminary adjustments where a wide range oscillator is of considerable help.

8.4 144MC Parametric Amplifiers

Parametric amplifiers for the 144 mc band are limited in frequency range to about 100 kc, and present designs suitable for amateur use would be limited to some part of the 4 mc band such as from 144.0 to 144.1 mc. The units can be used over the whole band by retuning, adjusting the antenna coupling, and varying the pump oscillator frequency and amplitude. The narrow frequency range limits their usefulness to weak signal reception in

long distance work where the frequency of the transmitting station is known. Noise figures in the vicinity of one db can be obtained with several types of parametric diodes or varactors. Any VHF or UHF type can be made to function if the constructor has enough patience in the project.

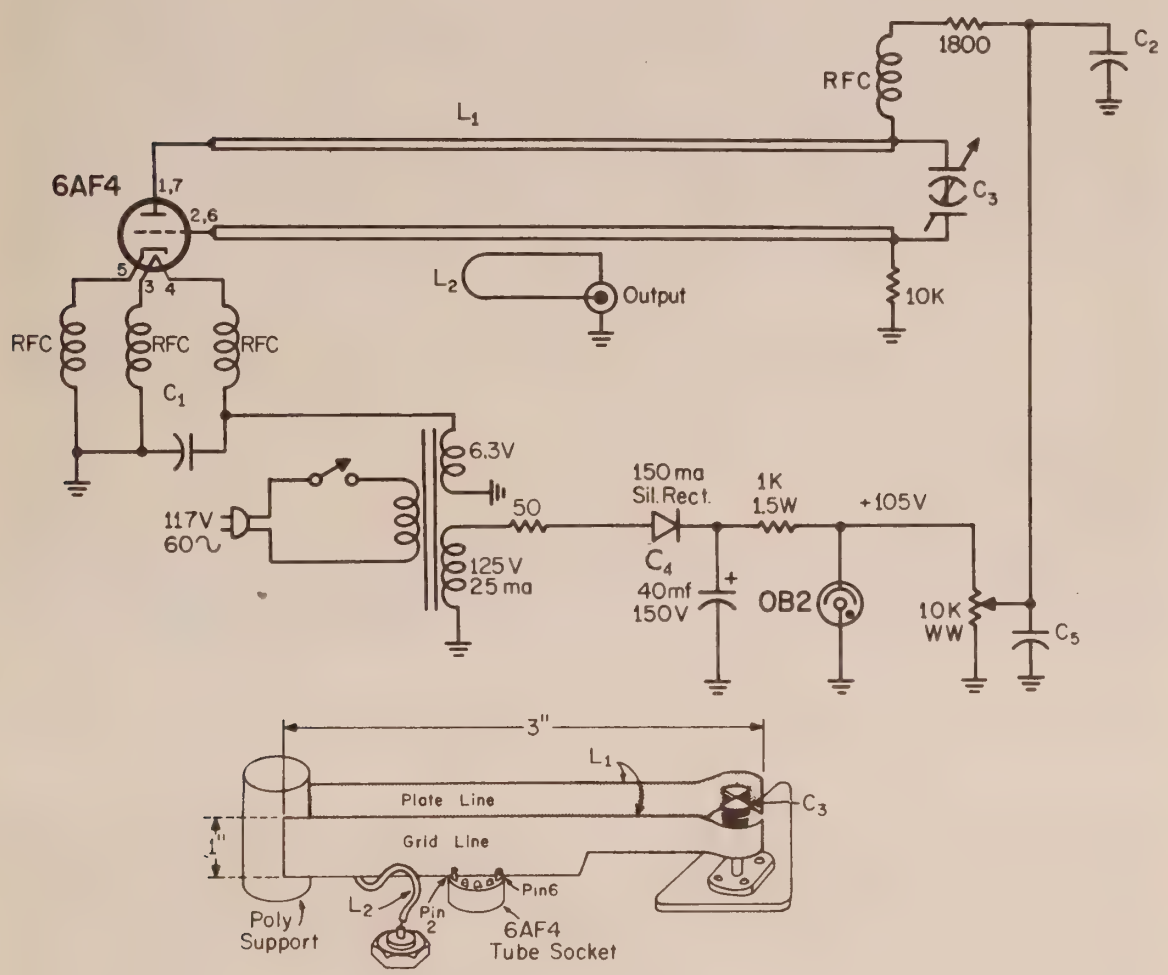

Fig. 8.14—Circuit and construction details for the 1000 mc pump oscillator. Details of L_1 are shown below diagram. Inductance L_1 is undercut on the tuning capacitor end to clear the mounting as shown in fig. 8.13.

$C_{1,2}$—500 mmf.
C_3—2.5 to 8 mmf; 9 plate Johnson Butterfly Capacitor.
C_4—40 mf, 150V.
C_5—.5 mf 400V.
L_1—See Detail above.
L_2—Output link, ¾" long, ⅛" wide.
RFC—4" of #24 enam, 1/16" diameter wound into r.f. chokes.

The amplifier and one of the pump oscillators is shown in figs. 8.15, and 16. This amplifier schematic diagram is shown in fig. 8.17. The amplifier is built into a surplus aluminum can 12 × 3 × 4 inches. The parts are all mounted on a 4 × 12 inch plate of aluminum (fig. 8.16). One change was made after the photograph, shown in fig. 8.15, was taken. The output circuit, was coupled over to the input jack through a variable capacitor. The more usual circuit with two idler frequency traps may be used, both traps being connected to the 144 mc copper tubing line. The system shown in fig. 8.17 seemed to be a little easier to adjust into parametric amplification. When a relatively low frequency pump oscillator is used, such as the one illustrated with this amplifier, one or two added idler frequency capacitors must be used down towards the shorted end of the 144 mc line in order to tune this line to the idler frequency. Usually one about 3 or 4 inches up the line will take care of this, because some reaction and tuning can be used in the pump oscillator circuit (fig. 8.17) on the far side of the parametric diode. In any case, these adjustments all interlock, and it takes considerable patience to obtain the desired results. Just to complicate matters, these diodes are excellent frequency multipliers and may double or triple the pump frequency well enough to operate with much higher idler frequencies, which would mean different capacity adjustments along the 144 mc line. If a wide range pump oscillator is available, it will be found that any parametric amplifier can be made to function at several pump frequencies. The higher values produce lower noise figures, but sometimes stability and oscillator power requirements are not easily met and long time periods of operation are easier with lower frequency pump oscillators. However, the pump oscillator frequency should be more than three times the signal frequency and exact multiples should be avoided for low noise figures.

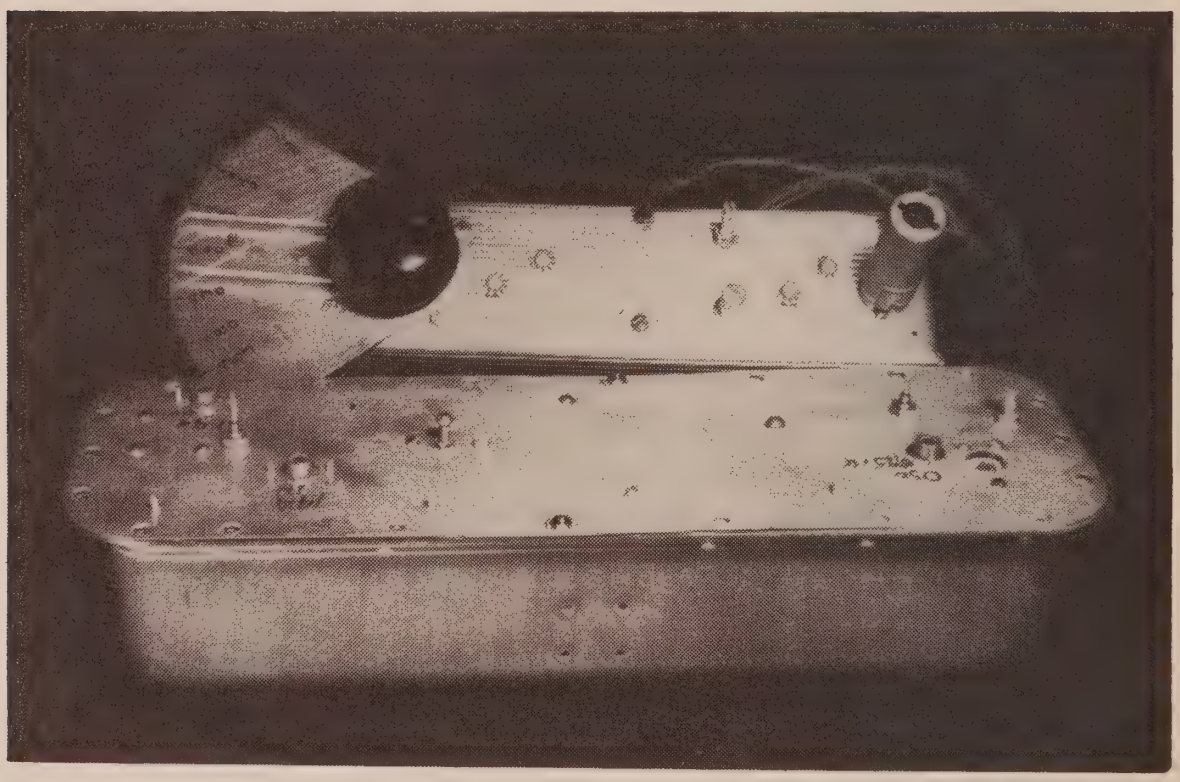

Fig. 8.15—A 144 mc parametric amplifier with the pump oscillator in the rear. The pump oscillator is the 435 to 485 mc unit of fig. 8.8.

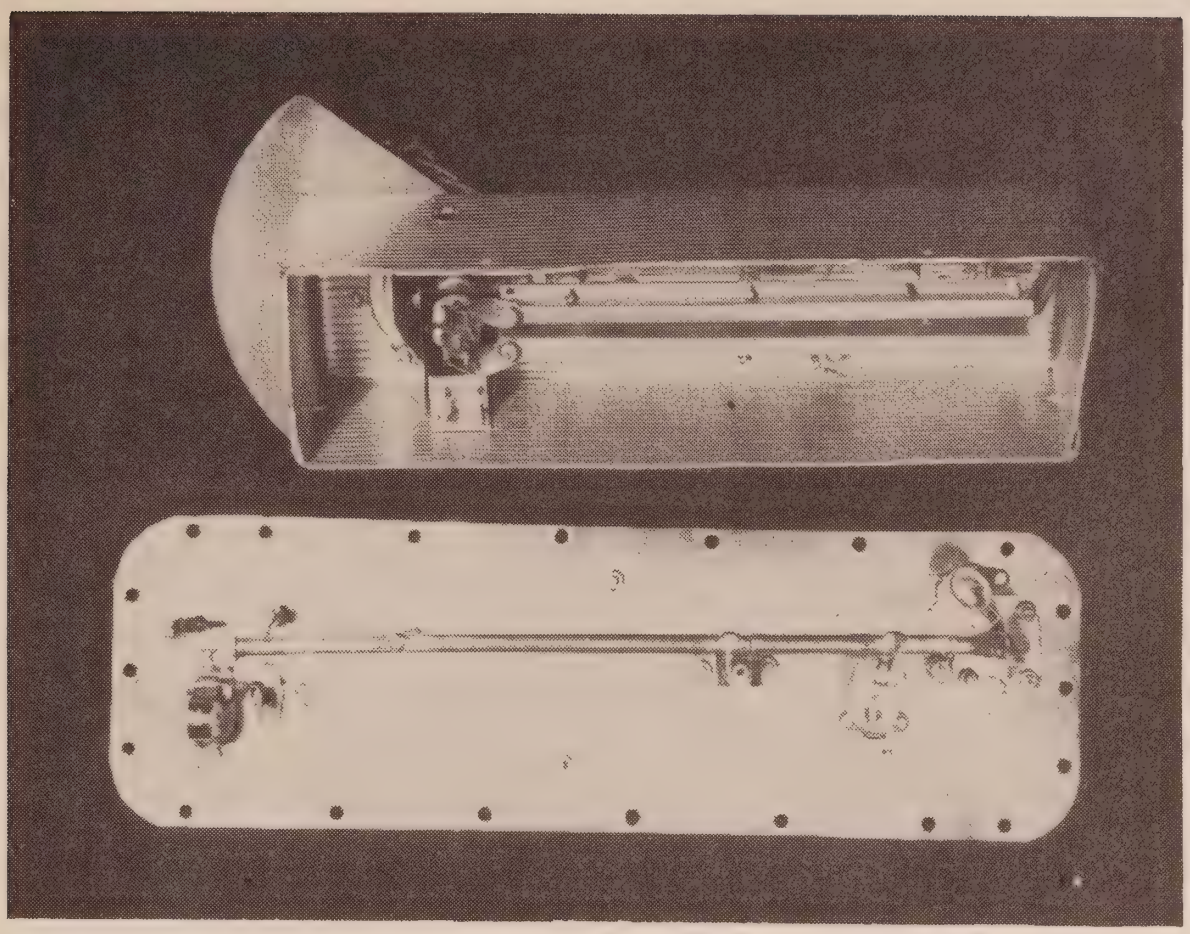

Fig. 8.16—Bottom view of the parametric amplifier and pump oscillator. Capacitor C_4, a piston type, may be seen at the right end of the line while C_3 is ⅔ of the way to the left. On the pump input end on the right, L_3 may be seen covering C_7. The input circuit (144 mc) was modified after the photo was taken.

In adjusting this amplifier or any other unit, the usual procedure is to gradually increase the pump oscillator amplitude and vary its frequency over its whole range until oscillation can be heard in the i.f. receiver range of tuning, or at least a very great increase of noise. The parametric amplifier can be roughly set to the desired frequency of operation with the pump oscillator disconnected. A signal generator or diode noise generator may be used for this purpose.

All these preliminary adjustments will take a lot of time unless a wide range pump oscillator is available for test purposes. A narrow range oscillator is very useful in exact adjustments since it is easier to set to the desired frequency, usually a little removed from the spots where the parametric amplifier breaks into sudden oscillation. The proper pump frequency is the one where the idler frequency is resonant and its power is being correctly dissipated in the amplifier. At this oscillator frequency, a slow change in pumping power will produce a gradual change of noise or signal amplification up to an oscillating point since this is a regenerative r.f. amplifier. In most oscillators a variation of plate voltage or output coupling for power output variation will also cause a frequency change. This requires a fine adjustment of the oscillator tuning control.

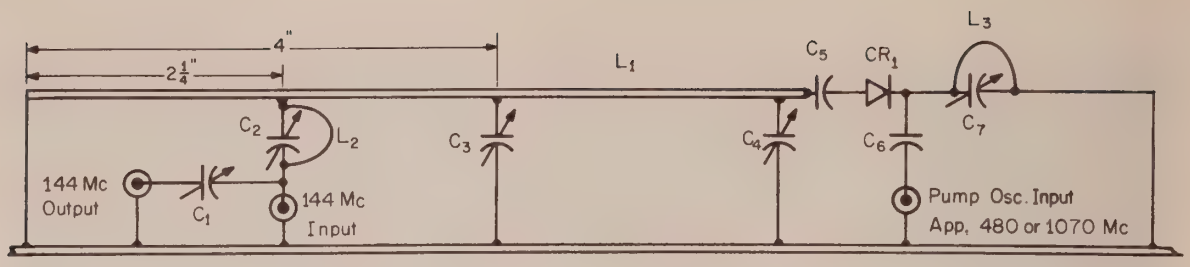

Fig. 8.17—Circuit and dimensions of the 144 mc parametric amplifier.

C_1—4-40 mmf.
C_2—3-13 mmf.
$C_{3,4}$—1-10 mmf piston capacitor.
C_5—10 mmf.
C_6—½ mmf.
C_7—3-13 mmf.
CR_1—Parametric Diode, Hughes HPA 2800.
L_1—11" long, ¼" diam. tubing, 1⅛" above chassis plate in a 12×3×4 inch shield can. Inductance L_1 is resonated at 144 mc and $F_p - F_{sig} = F_1$ frequencies.
L_2—Trap circuit at F_i of 335 mc or 925 mc. 925 mc—¾"×⅛" copper strap. 335 mc—4 turns #20E ⅜" long, ⅛" diam.
L_3—1¾" long × ¼" copper strap in U shape across C_7.

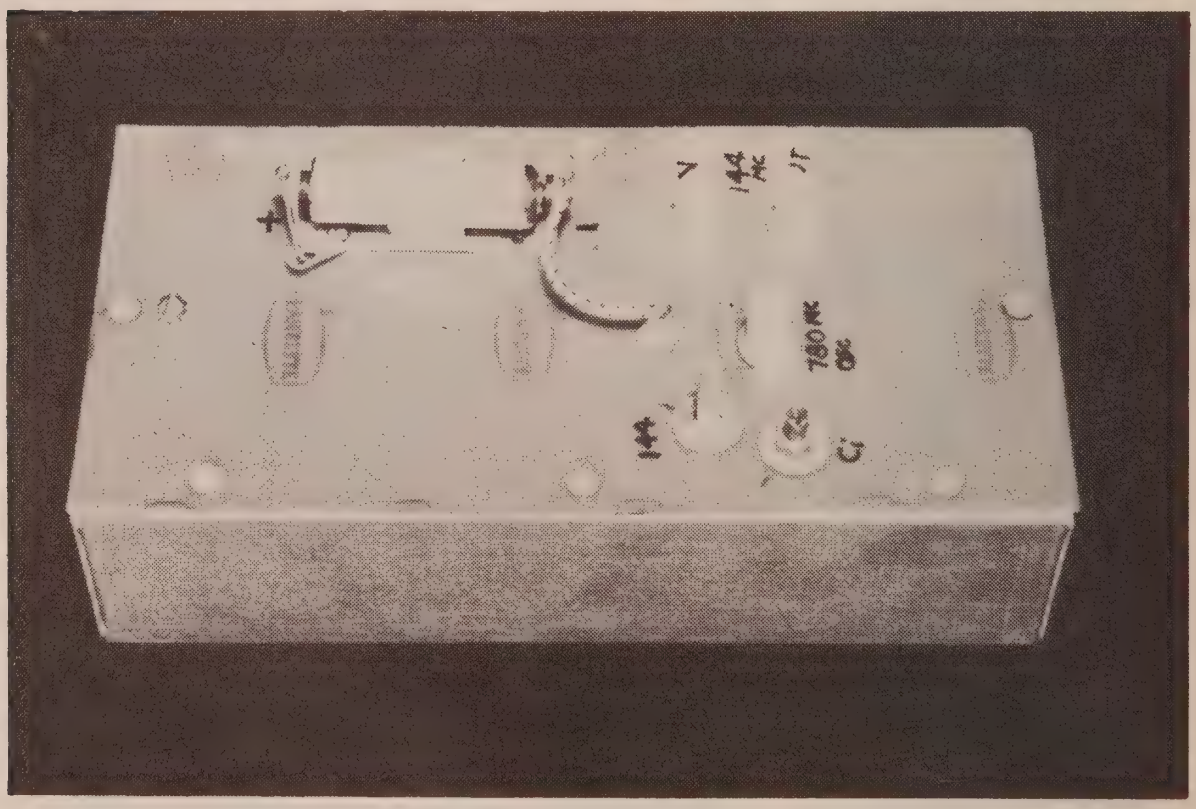

Fig. 8.18—Top view of the folded line 144 mc para amp. The 1.5 V cell is in the upper left. The upper jacks are, left 144 mc input, right 144 mc output. Bottom center jack is 780 mc pump input. The two capacitors are; left, 144 mc and right, idler frequency.

In addition to these problems, it must be remembered that idler frequency capacitor adjustment (if one is used), signal frequency adjustment, input and output coupling, trap circuits if used, oscillator strap circuit adjustments, all react on each other and must be correctly set for good amplifier operation. Fortunately this condition only holds true for preliminary adjustments. Week to week operation on schedules at W6AJF has indicated that a change in temperature, antenna s.w.r. changes, and aging of parts may require a tiny change in signal circuit tuning, oscillator frequency tuning or amplitude. Usually a five to ten minute warm up period is required for reaching normal operating conditions on any band, about the same as that required by a very good communications receiver being used as the i.f. amplifier. A very excellent check on day to day operation is to couple a signal marker oscillator or a signal generator to a nearby antenna and check the signal to noise ratio in tuning through the signal frequency with the i.f. receiver controls. This couples a test signal of very weak amplitude into the operating antenna and complete system. The parametric amplifier and pump oscillator adjustments for best nf reading with a diode noise generator are not apt to be quite the same as when the amplifier is connected to an antenna. A regenerative amplifier is easily upset by tiny changes of antenna feeder impedance or capacitance and these values may not be the same as a diode noise generator and certainly not the same as the impedance of a signal generator. Antenna systems subject to impedance changes with weather conditions are not suitable for use with parametric amplifiers. Flat twin lead and small open wire feeder systems are troublesome in this respect.

The 144 mc parametric amplifier shown in figs. 8.18, 19 and 20 is designed to fit into a 4 × 8 × 2 inch chassis, a size used in many converters. The 4 × 8

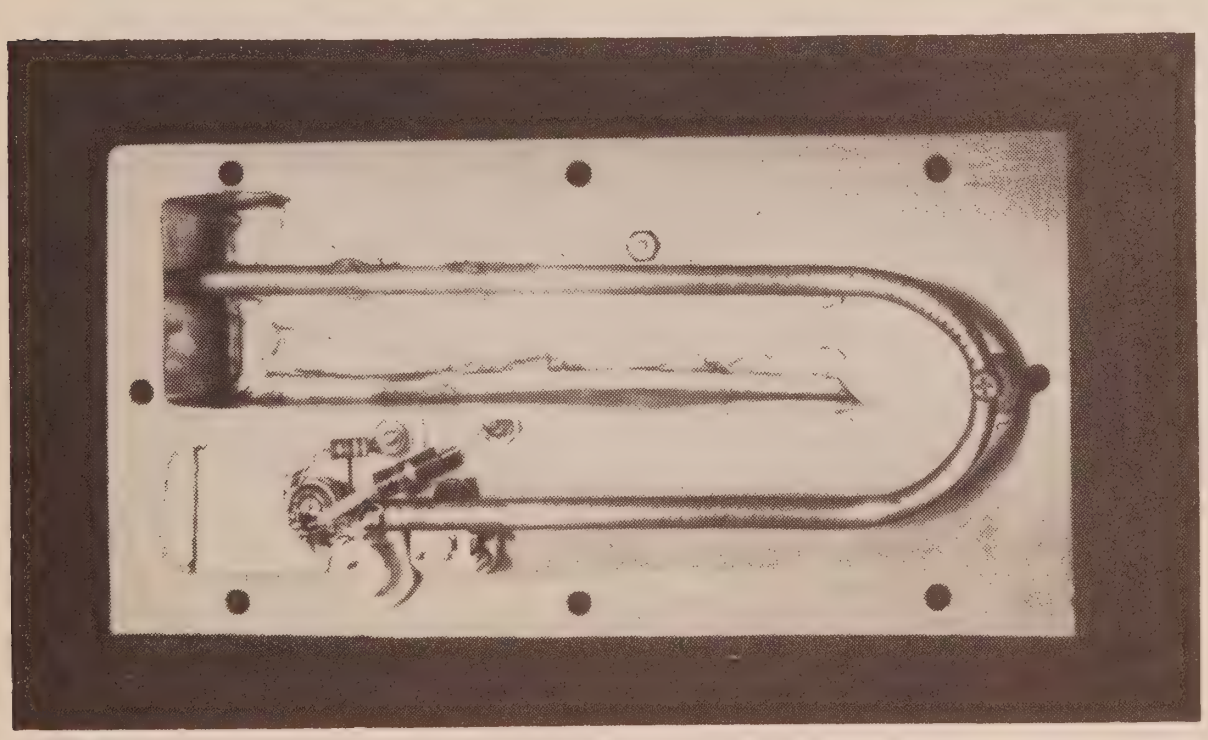

Fig. 8.19—Bottom view showing the L shaped end support and shield down the center of the bent line. At the lower left is the low impedance line for the pump input with the 500 mmf button capacitor on it. The two tuning capacitors, idler frequency and 144 mc tuning may be seen, from left to right.

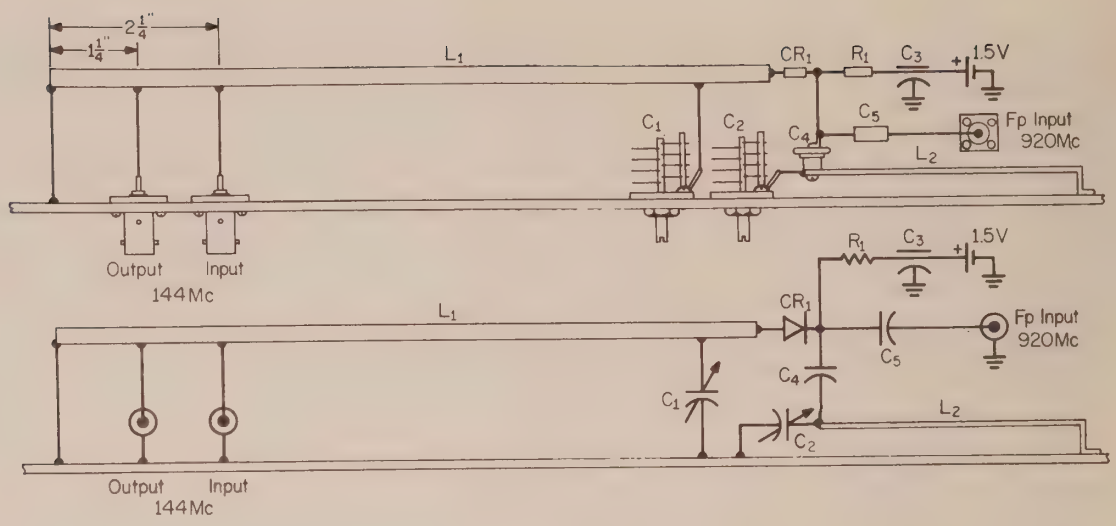

Fig. 8.20—Circuit and construction details for the 144 mc folded line parametric amplifier.

C_1—3-10 mmf—144 mc tuning.
C_2—2-8 mmf—oscillator and F_i tuning.
C_3—500 mmf feedthrough capacitor from bias battery.
C_4—500 mmf.
C_5—½ mmf.
CR_1—Parametric Diode, Hughes HPA 2800.
L_1—12¼" × ¼" diam. in a 2" × 2" space. 144 mc and F_i line. Medium Z, approximately 130 ohms.
L_2—1" wide × 1¼" long, 3/32" up from chassis. Low Z, approximately 35 ohms.
R_1—10 megohms.

inch mounting plate is a piece of copper plated sheet bakelite, though any metal plate would be satisfactory. A piece of sheet copper is bent and soldered to this plate as shown in fig. 8.19 so as to form two 2 × 2 inch trough cavities for the 144 mc ¼ inch diameter line. The characteristic impedance is about 130 ohms with the aluminum chassis in place. The 144 mc line is bent into a U shape in order to fit in a short chassis space. The line length and impedance being different than the other 144 mc amplifier, the idler frequency resonance is different and a pump frequency of about 970 mc functions very well even without idler traps in the coaxial jack leads. Probably a 736 mc parallel type trap in the antenna jack circuit would improve operation with varying antenna impedances. The reverse bias voltage on the parametric diode helps a little in tune-up adjustments and in obtaining smooth control of regenerative amplification. Nearly any of the low voltage break-down type of diodes (made for this service) will work without an external bias source. A d.c. blocking capacitor in the diode circuit causes it to build up its own internal bias from the pump oscillator energy. This capacitor should be smaller than the 500 mmf value shown in fig. 8.20, probably not over 50 mmf with self-bias.

The low impedance flat plate line for the pump oscillator input (figs. 8.19 and 20) is desirable in order for it to be a low impedance at the signal fre-

quency. A fixed quarter wave circuit of this type is used sometimes; however, the adjustable resonant type shown often makes it a little easier for amplifier alignment.

8.5 222 MC Parametric Amplifier

The design of a 222 mc parametric amplifier is quite similar to a 144 mc except in line length. The same adjustment procedure and problems apply. The discussion in the preceding section applies to this band. The amplifier illustrated in figs. 8.21, 22 and 23 has been in service at W6AJF for several months with a 6AF4 pump oscillator adjusted to about 970 mc. Fixed trap circuits (figs. 8.22 and 23) were tuned to 750 mc, the idler frequency for installation in the 220 mc jack leads. The traps help prevent the jack circuits from upsetting the line resonance at the idler frequency without too much ill effect at the signal frequency. Trap circuits are not always necessary.

One variation can be seen in figs. 8.22 and 23. The pump oscillator jack is capacity coupled to the 222 mc line side of the crystal with between ¼ and ½ mmf capacitance. The more usual connection is to the low impedance flat plate line. Either will work in some designs. Both should be tried in constructing the amplifier since a little variation in line lengths or impedances will make quite a difference in pump oscillator input requirements.

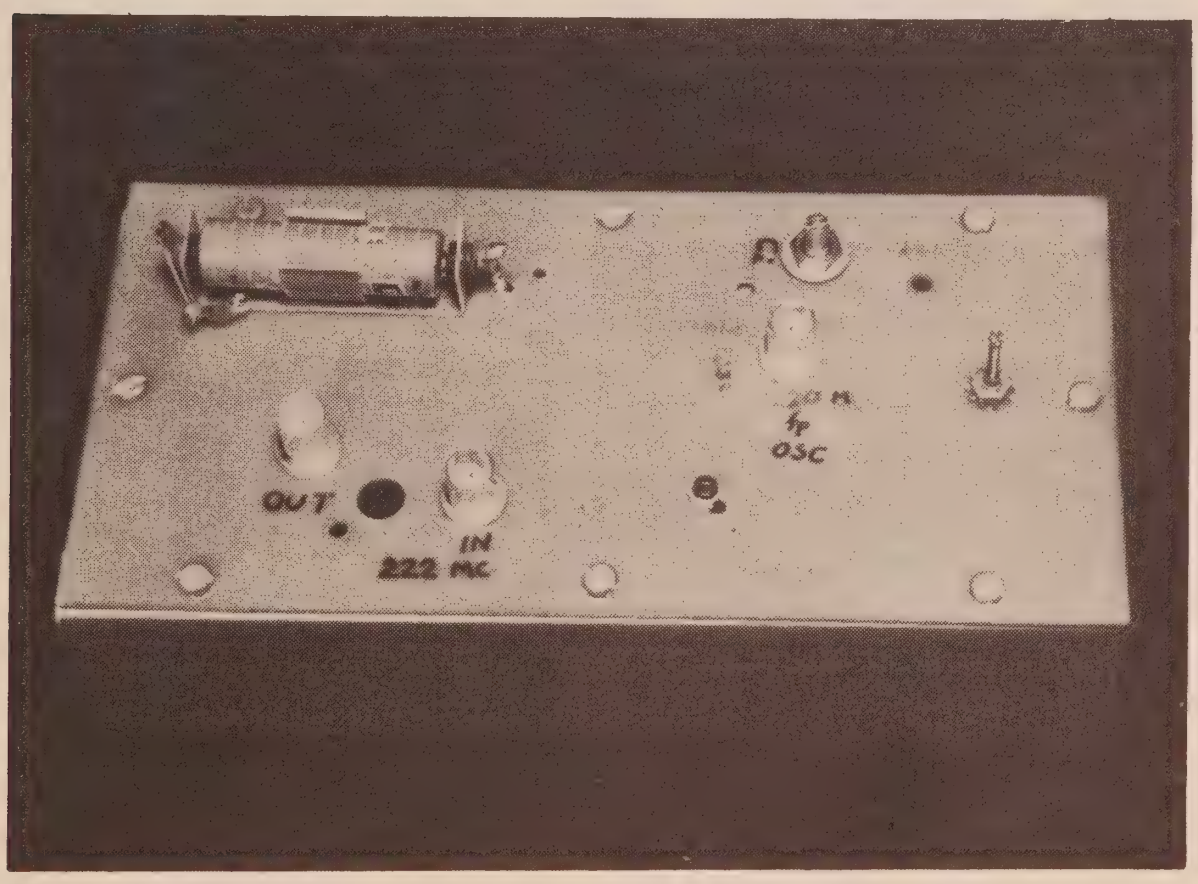

Fig. 8.21—A 222 mc parametric amplifier. The connectors in the lower left are 222 mc out and 222 mc in. The upper right connector is the pump input. Above the pump input is C_5, used to adjust the idler frequency. The screw on the right is C_3, a piston capacitor, used to tune the signal frequency.

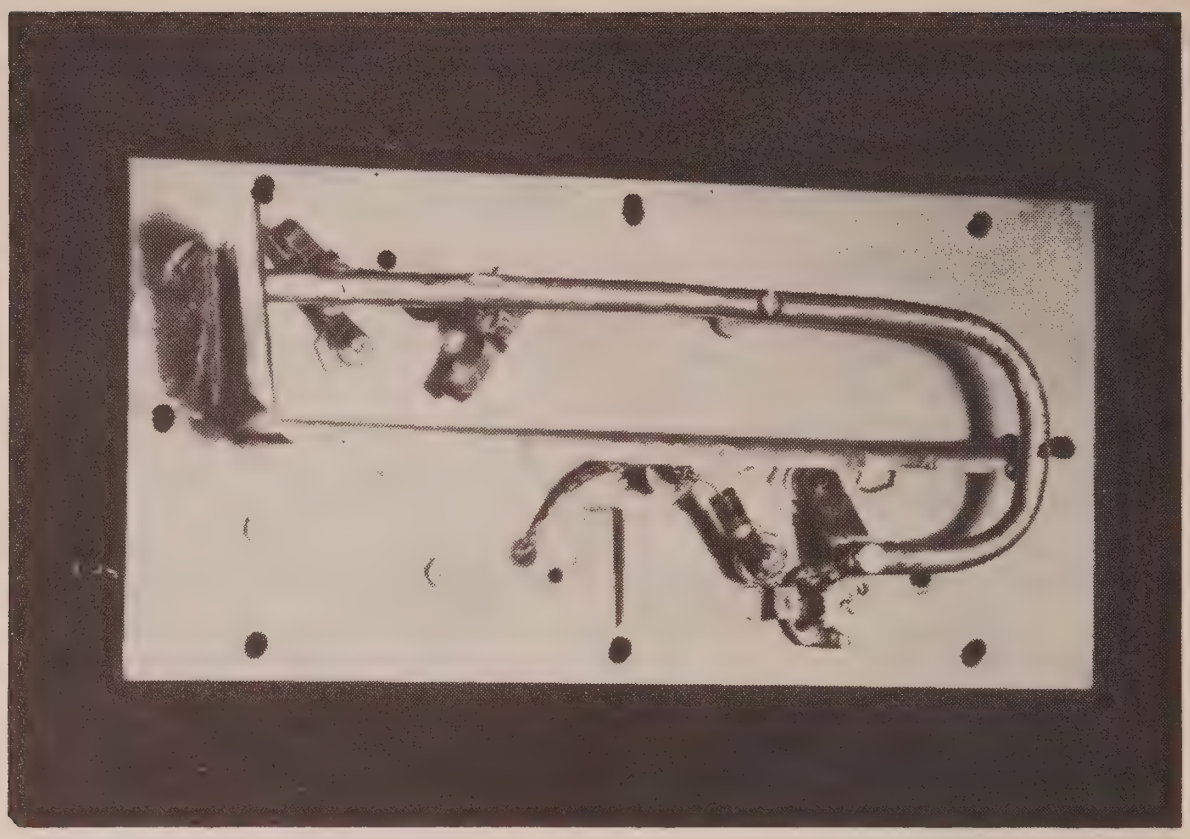

Fig. 8.22—Bottom view of the 222 mc folded line parametric. The L shaped partition may be clearly seen. The two idler frequency traps may be observed in the upper left while the diode circuit is in the lower left. Capacitor C_3 is not visible but is under the line at the bend.

The ¼ inch diameter line, fig. 8.22, is folded back around the shield partition in order to use a 4 × 8 panel plate and 4 × 8 × 2 inch chassis mounting system. A straight line built into a 12 × 2 × 2 inch box might have a little better Q and better nf. The measured figure was close to 1 db in the unit shown when used in front of a 417A tube r.f. amplifier-converter into a communications receiver for a tunable i.f. system.

A parametric amplifier with its 3 or 4 db improvement in noise figure is very useful for long distance tests in the 220 mc band. It will cover from 100 to 200 kc, without readjustment, so it is a narrow band amplifier suitable for spot frequency work. Man made electrical noises become a little less troublesome in this higher band and the low noise figure becomes very useful for either voice or c.w. reception. It is not useful or desirable for local "rag-chewing" contacts but is a very desirable accessory for the 220 mc band operator.

8.6 432 MC Parametric Amplifiers

Parametric amplifiers become very useful in the 432 mc band, especially in localities where all of the amateur stations operate within about a 300 kc range. The amplifier may be used over about 300 kc tuning range without any readjustments. A noise figure under 2 db may be obtained even with a fairly low pump frequency, that is relative to the signal frequency. Some 1600 to 1700 mc pump oscillators were used with the amplifiers shown here.

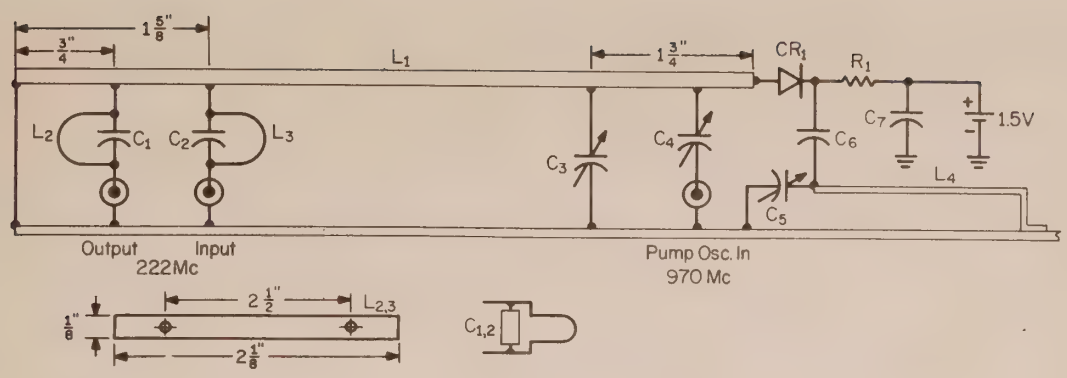

Fig. 8.23—Circuit and construction data for the 222 mc parametric amplifier. The entire unit is housed in a 4×8×2 inch box.

C_1, C_2—2 mmf NPO ceramic capacitor.
C_3, C_5—½ to 2 mmf.
C_4—¼" wide copper tab capacitively coupled to L_1. See photos. Approximately ¼ to ½ mmf.
C_5—2-8 mmf.
C_6, $_7$—500 mmf.
CR_1—Parametric Diode, Hughes HPA 2800.
L_1—9" length of ¼" diameter tubing in 2" space with one end folded back to fit in 4×8×2 inch can with center shield up 1" from chassis. Impedance, approximately 130 ohms.
L_2, L_3—2⅛×⅛ inch copper strip line, as illustrated, for F_i traps.
L_4—1¼" long × 1" wide up 1/16" from chassis base. Impedance approximately 23 ohms.
R_1—10 Megohms.

A higher frequency, wide range pump oscillator would be very desirable since noise figures around 1 db would be possible and the operating conditions could be set up much more easily. However, pencil triode tube oscillators in the 1680 mc ± 12 mc range were available and were used with several 432 mc parametric amplifiers. These radiosonde oscillators can be modified to cover from about 1550 to 1725 mc by sliding the cavity end plates either way. A small capacity disk with screw adjustment will then cover about 20 mc range. This narrow range requires careful adjustments in the amplifier unit. Sometimes a line length variation of a quarter inch, or spacing of 1/16 inch change will mean the difference between no amplification and satisfactory results in the amplifier unit itself.

The 432 mc unit illustrated in figs. 8.24, 25 and 26 uses a shorted half wave tuning line made of 1 inch wide sheet copper. Several coupling schemes were tried, resulting in a rather untidy appearing line, fig. 8.25. The coupling links on each side and under the flat plate line have to be adjusted in location for best results. If these links are resonated at 432 mc with a series capacitor of 1 to 10 mmf, less idler frequency reaction results and the amplifier is a little easier to adjust. The pump oscillator at about 1560 mc could be coupled

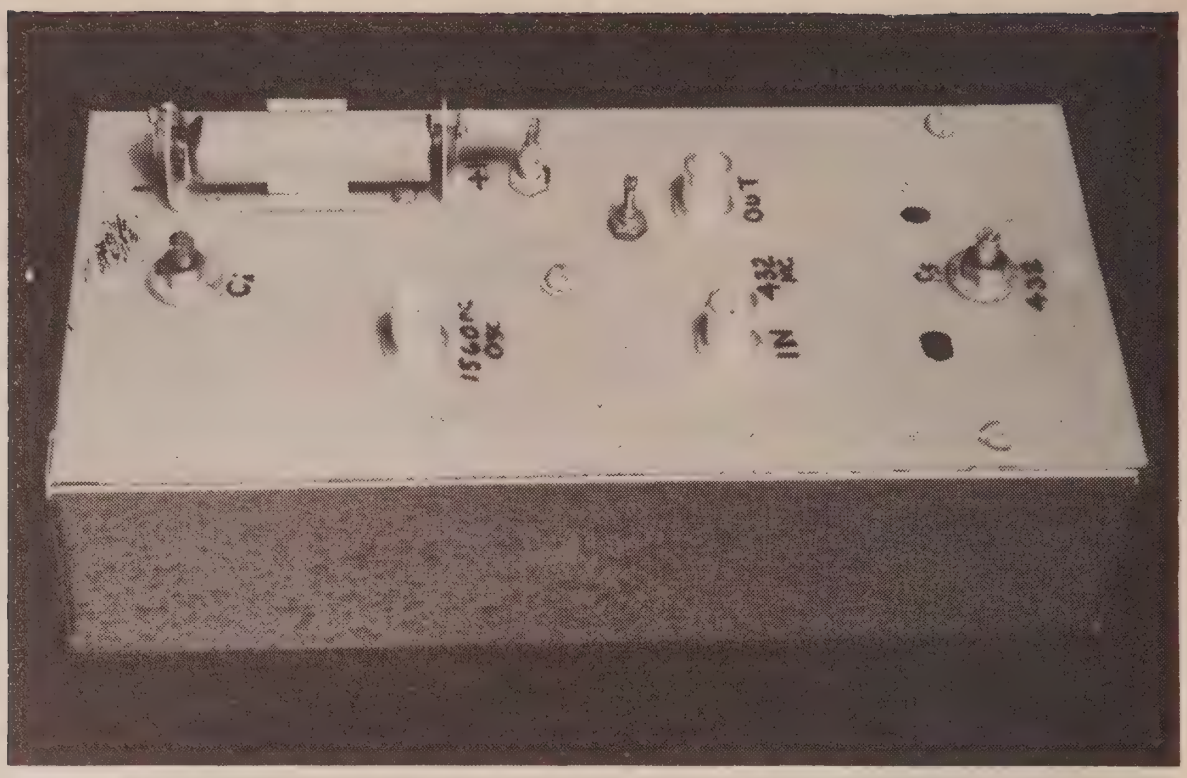

Fig. 8.24—Top view of a 432 mc parametric amplifier. The left connector is for the pump oscillator input. The connectors to the right are, top, 432 mc output and bottom, 432 mc input. The adjustment screw on the left is C_3, idler frequency, while C_1 is located on the right end.

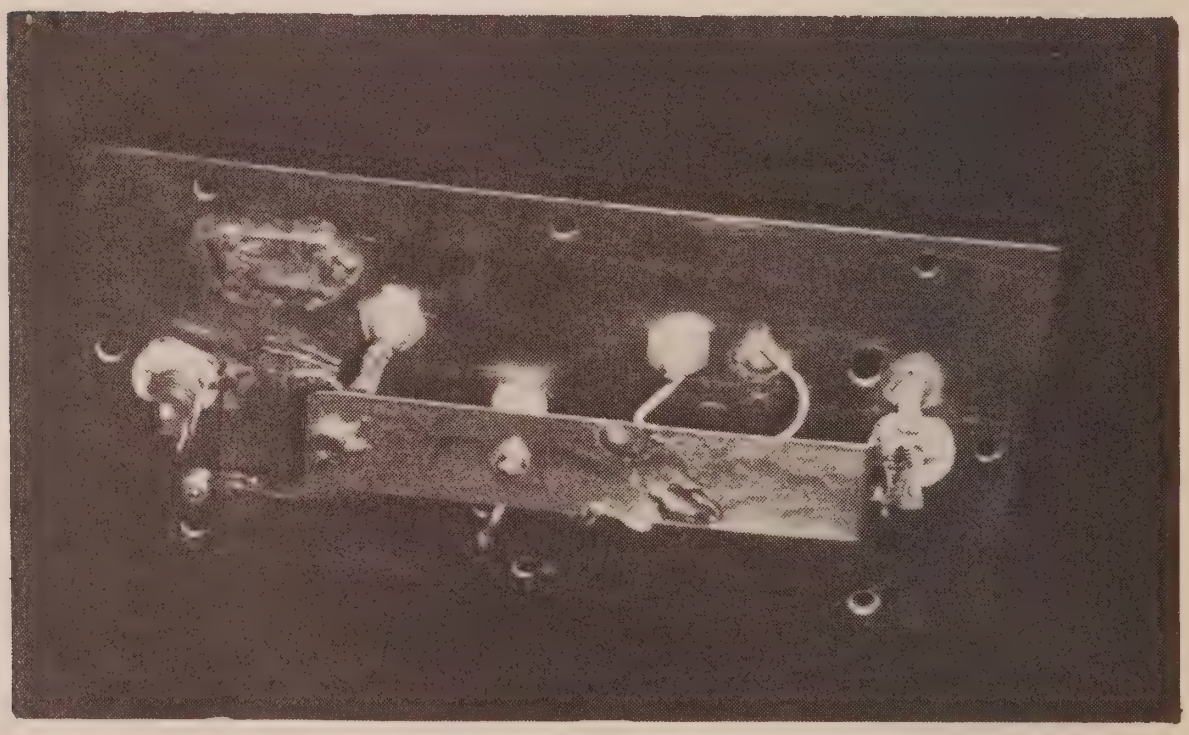

Fig. 8.25—Bottom view of a shorted half wave line parametric amplifier for 432 mc. Capacitor C_3 may be seen on the extreme left and C_1 on the extreme right. Plate L_1 is supported by C_1 and a ceramic stand off 2″ from the left end. Input loop may be seen above L_1. Pump coupling capacitor, C_2 is the small copper tab solder to the pump input jack.

into the amplifier on either side of the parametric diode. The scheme shown in fig. 8.25 and 26 uses a short bent piece of sheet copper soldered to the BNC coaxial fitting center post and spaced about 1/16 inch from the flat plate line. Some coil dope around the coaxial fitting pin at this point is needed to prevent rotation of this center pin. The low impedance tuned line at the other end of the diode was originally a half wave scheme grounded at both ends for a higher pump frequency. That pump oscillator was too unstable and erratic, so was discarded. The low impedance line, fig. 8.25, then had to be cut in two, not an easy task as evidenced by the ragged edges in the photo. This modification permitted further tests with other pump oscillators. A really satisfactory pump oscillator for 432 mc tests was not available, such as the General Radio 1000 to 2000 mc unit oscillator.

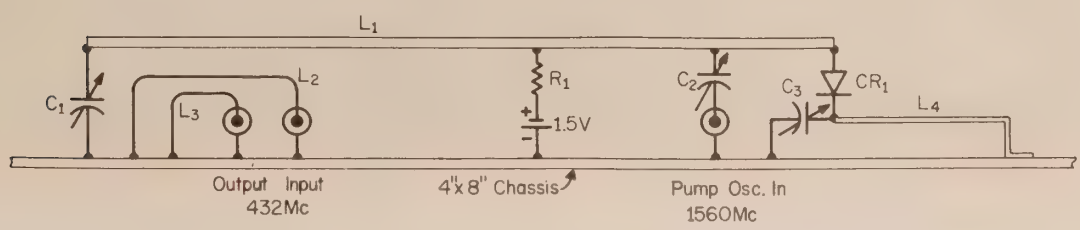

Fig. 8.26—Circuit diagram and construction data for the 432 mc shorted halfwave line parametric amplifier.

C_1—3-12 mmf, 432 mc tuning.
C_2—1/4" wide copper tab capacitively coupled to L_1. See photos. Approximately 1/3 mmf.
C_3—2 10 mmf. F_i adjust.
CR_1—Parametric Diode Hughes HPA 2810 or Microwave Assoc. MA-460B.
R_1—10 megohms.
L_1—432 mc flat plate line 5" long × 1" wide up 3/4" from the chassis. Line is supported by C_1 and ceramic standoff 2" from other end.
L_2—Input link, 2" loop of hookup wire under one side of 432 mc line.
L_3—Output link, 1 1/2" loop of hookup wire under other side of 432 mc line.
L_4—F_i, 1090 mc tank circuit, flat plate line 1" × 1", up 1/16" from the chassis.

A second 432 mc parametric amplifier shown in figs. 8.27, 28 and 29 is built into a similar sized copper panel and 4 × 8 × 2 inch chassis as a mounting box. This unit uses a similar copper plate line 1 inch wide but grounded at one end in a quarter wave circuit at 432 mc and three quarter wave at the idler frequency. The impedance is high enough at the pump frequency so one line could be used for all three tank circuits with the parametric diode mounted directly through the 4 × 8 inch copper sheet panel (figs. 8.27 and 28). This feature has some advantages of simplicity but the line has to be so close to the plate that it is very difficult to couple into and out of it at 432 mc.

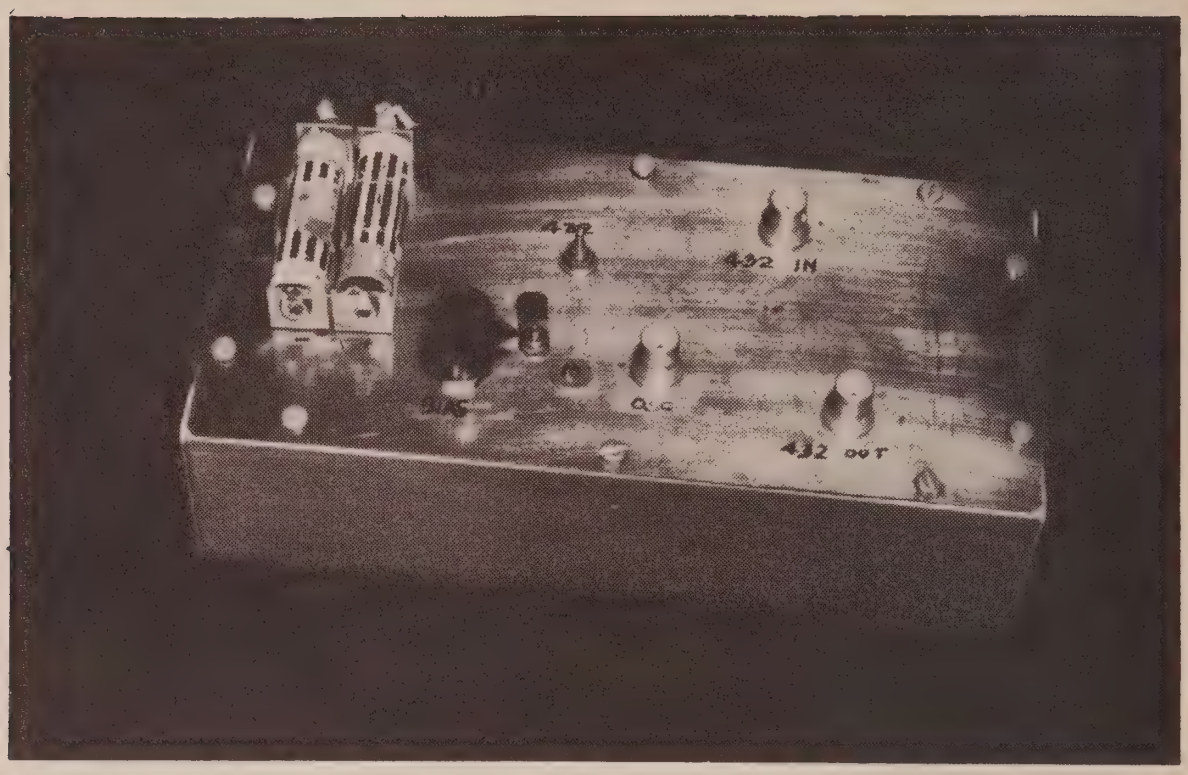

Fig. 8.27—A second 432 mc parametric amplifier using a grounded ¼ wave line. The control on the left is R_2, the bias pot. To the right of the pot is the pump input connector while above the pump input in the 432 mc input connector. The 432 mc output connector is bottom right. Capacitor C_{22}, a piston type, for tuning the line to 432 mc, is to the upper right of the bias control. Hold-down tab for CR_1 may be seen near the bias knob pointer.

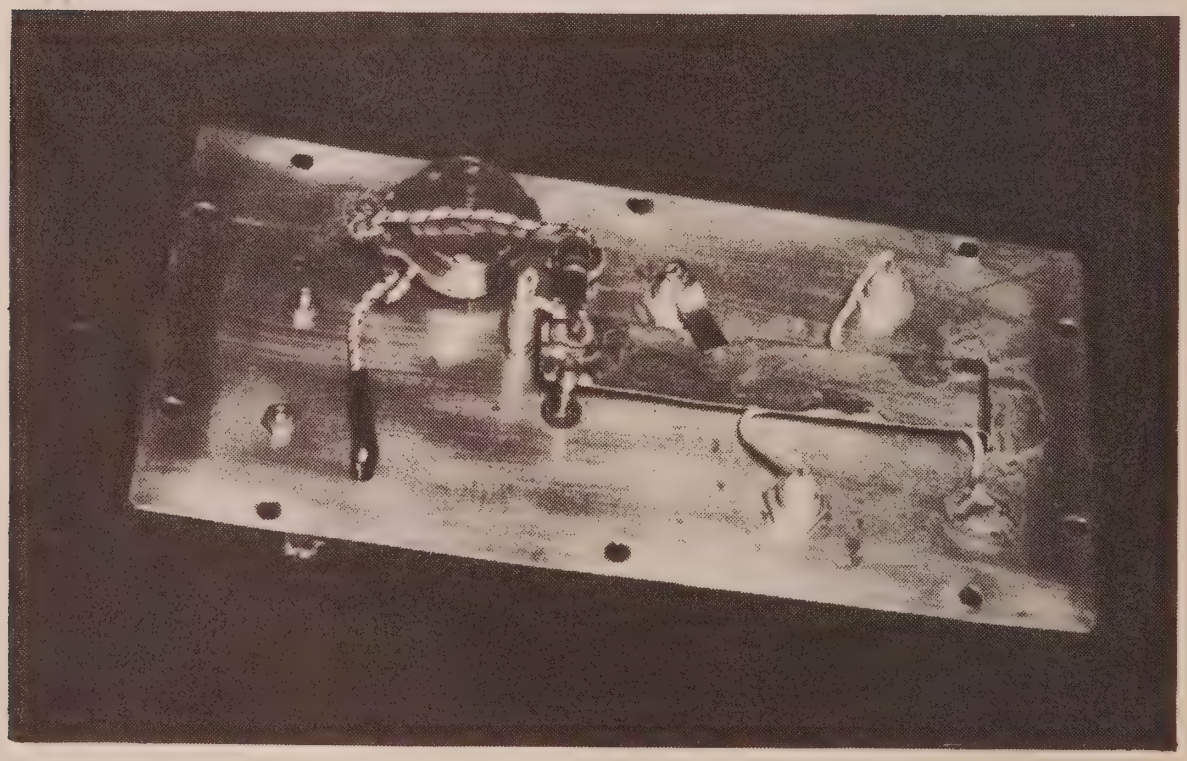

Fig. 8.28—Bottom view of the quarter wave line 432 mc unit. At the left end of the line is C_2. At the top of the line, left of center, is the copper tab that forms C_1 for pump coupling. At the top right is the output loop and on the bottom of the line is the input loop.

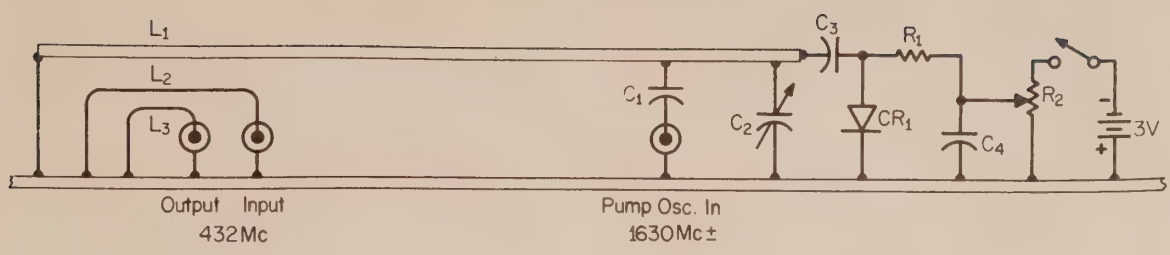

Fig. 8.29—Circuit and construction data for a quarter wave line 432 mc parametric. amplifier.

C_1—⅓ mmf formed by copper tab. See photo.
C_2—½-3 mmf piston capacitor.
C_3, C_4—500 mmf.
CR_1—Parametric Diode, Microwave Assoc. MA-460B.
L_1—4" long, 1" wide copper plate line up 3/16" from chassis.
L_2—Input link, 2½" of hookup wire.
L_3—Output link, 1½" of hookup wire. L_2 and L_3 are under opposite sides of L_1.
R_1—5 megohms.
R_2—2 megohms.

Insulated solid wire links were used for this purpose but this coupling problem more than offset the advantages of this simple design.

Finally, the unit shown in the photographs was rebuilt into the form shown in fig. 8.30. It uses a few more parts but is actually easier to keep in satisfac-

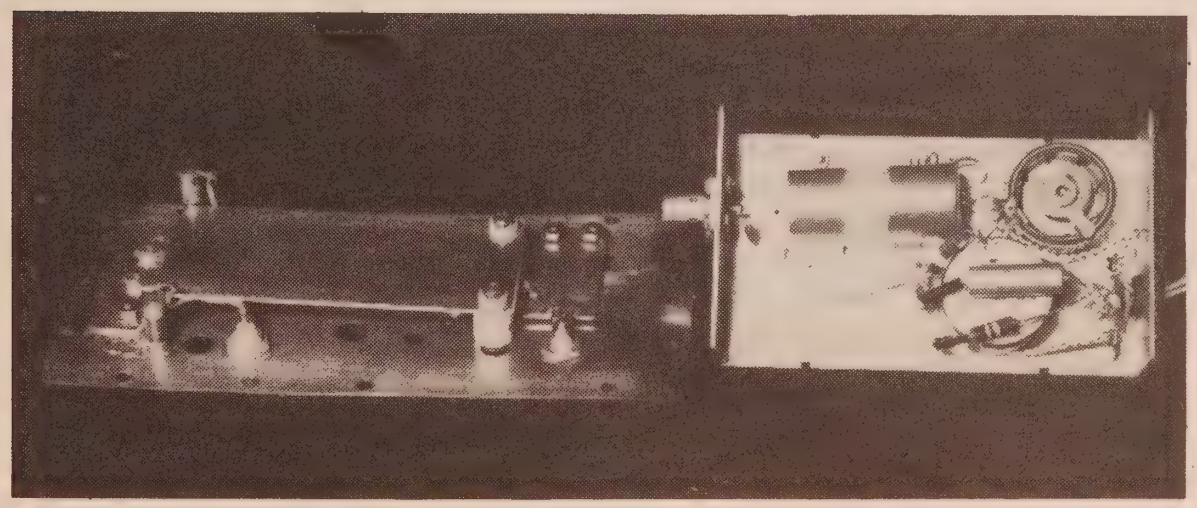

Fig. 8.30—A 432 mc parametric amplifier and pump oscillator. The pump line is the small plate close to the chassis on the right of the amplifier. Capacitors C_3 and C_4 are below the plate and are not visible. Front left corner contains C_2 and the output link while C_1 and part of the input link are visible above.

tory operation. The battery bias system was eliminated in order to have space for a pump frequency line. This means the use of a smaller d.c. blocking capacitor which can be in the range of 5 to 20 mmf. A piece of sheet brass about ⅝ inch square, spaced from the 432 line with a piece of teflon .02 inches thick, and held to the line with an insulated collar and small machine screw, solved the blocking capacitor problem. Series link tuning capacitors were added to aid in making preliminary adjustments. A wider line makes it possible to get more space between it and the 4 × 8 copper panel, for the same impedance as with a 1 inch line spaced 3/16 inch. The link coupling could then be adjusted more easily. The rebuilt unit as shown in fig. 8.30 has been the most satisfactory amplifier for 432 mc band general operation, local or long distance.

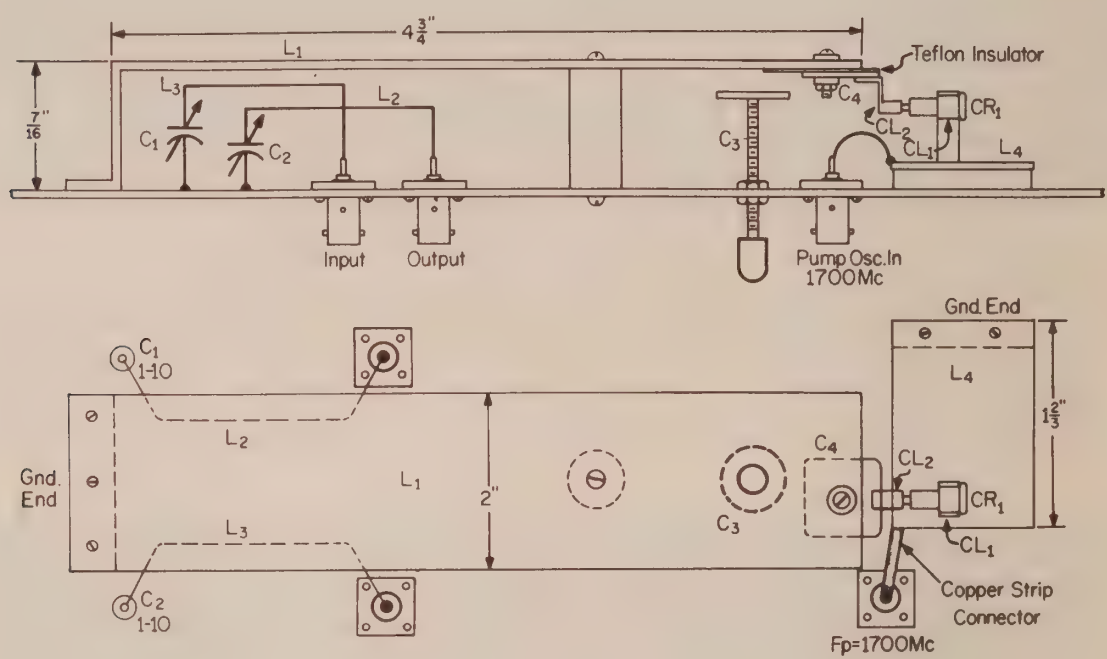

Fig. 8.31—The 432 mc parametric amplifier in its final form as developed from the unit shown in fig. 8.30.

C_1, C_2—1-10 mmf piston capacitors.
C_3—Copper plate, diameter of a penny, soldered to slug coil adjustment screw and base mounting.
C_4—Approximately ⅝" square of copper sheet insulated with Teflon and held with machine screw and insulated collars.
CR_1—Parametric Diode Hughes Products HPA 2810 or Microwave Assoc. MA-460-B.
CL_1—Fuse clip for large end of diode.
CL_2—Octal socket clip for small end of diode.
L_1—18 ga. brass sheet line, 4¾" long, 2" wide, up 7/16" from the chassis.
L_2—Output link, 1¼" long.
L_3—Input link, 1½" long.
L_4—Oscillator line, 1 × 1⅔ inches up 1/16" from the chassis.
Unit constructed on an 8 × 4 inch chassis and housed in an 8 × 4 × 2 inch chassis.

9

Test Equipment

SOME pieces of test equipment needed for testing and aligning VHF transmitters and receivers can be purchased economically. An a.c.-d.c. voltmeter and ohmmeter, a test signal generator and grid dip oscillator are instruments in this category. Other useful pieces of equipment can be built very easily, some of which are described in this chapter. In following the general trend of design, transistors and crystal diodes are used in nearly all of these instruments. This makes the units independent of a.c. power supply and reduces weight and size. Only a few volts of batteries are needed and if mercury type batteries are used, several years of service can be expected before replacement is required. This is one field where vacuum tubes are fast becoming obsolete.

9.1 Diode A.C. Voltmeter

The diode a.c. voltmeter illustrated in fig. 9.1 is useful in measuring audio and medium range radio frequency voltages. Its accuracy is a function of the circuit d.c. resistance. A transformer or coil voltage will give readings close to the actual microammeter scale values. The series resistors are chosen to provide full scale readings of .5, 5, 50 and 500 volts (r.m.s.). A 0 to 50 microammeter was used in this voltmeter.

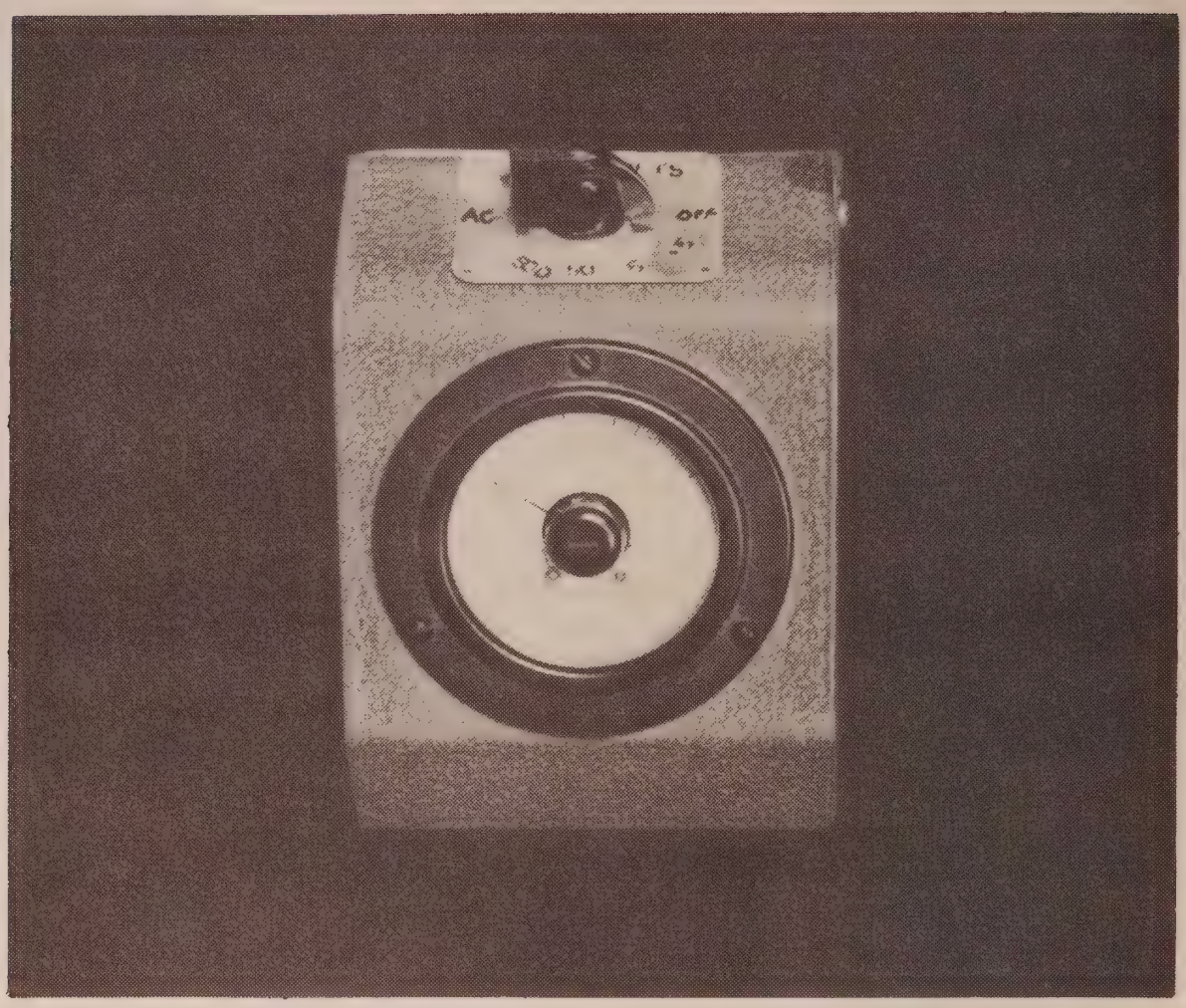

Fig. 9.1—An a.c. voltmeter using a diode rectifier. It operates in the a.f. range and medium range r.f. frequencies.

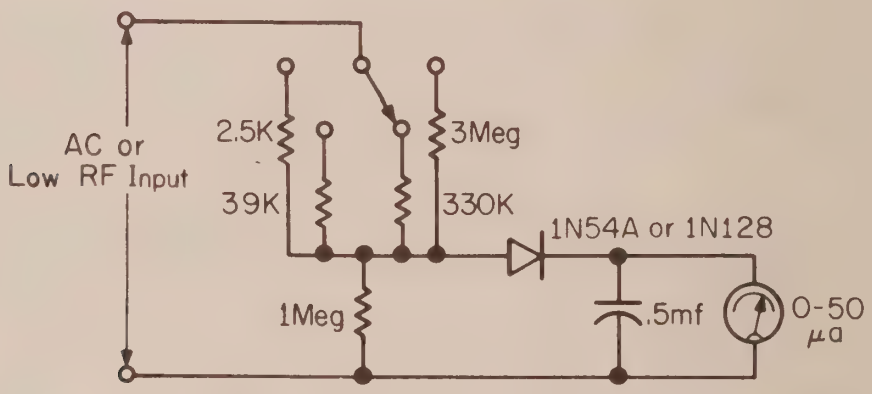

Fig. 9.2—Circuit of the diode type a.c. voltmeter shown in fig. 1.

9.2 A.C. and D.C. Diode Voltmeter

The peak reading voltmeter and its various cords and probes is shown in figs. 9.3 and 4. It has a useful range of up to 500 volts d.c. and up to 50

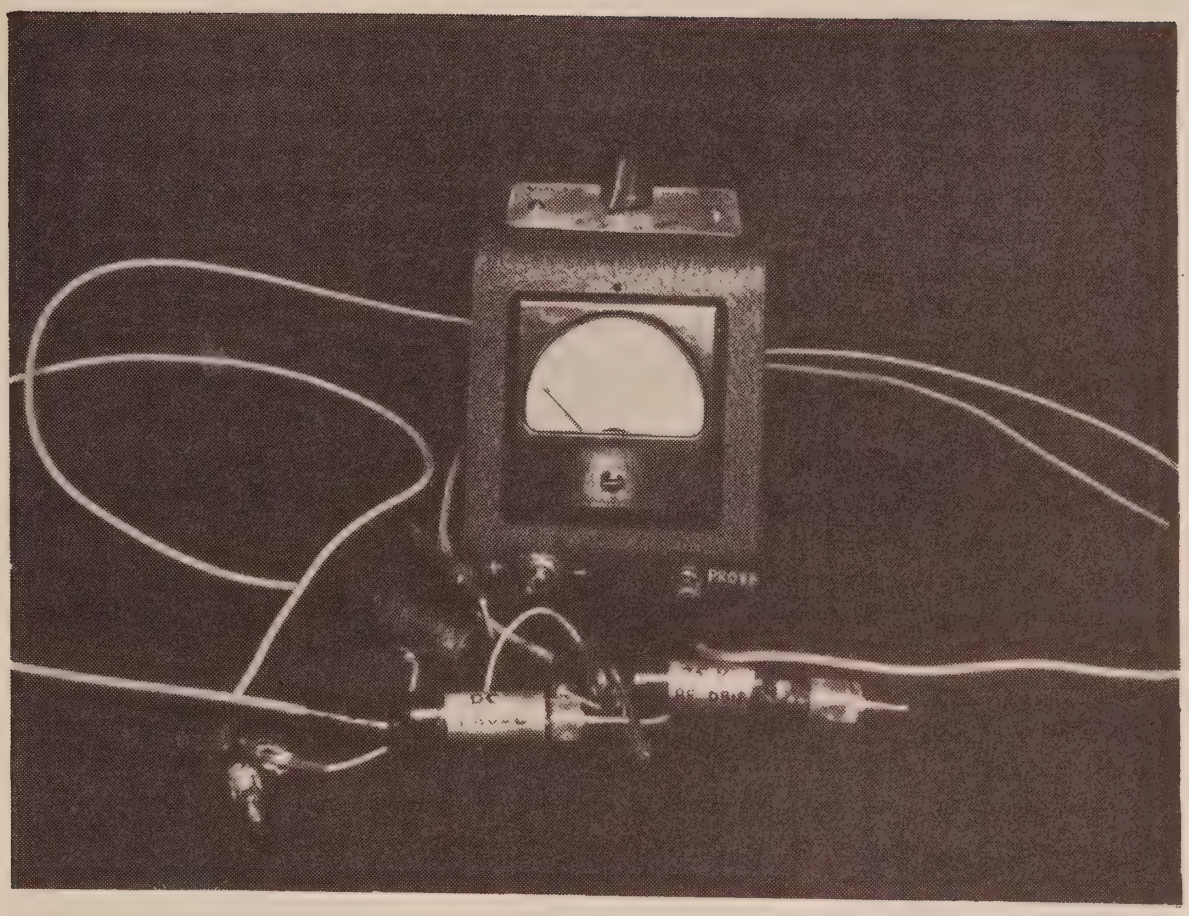

Fig. 9.3—A.c.-d.c. voltmeter using special probes. Toggle switch is for reversing meter polarity.

volts r.f. The use of a 0 to 50 microampere meter results in a d.c. voltmeter resistance of nearly 15,000 ohms per volt on the higher voltage ranges. Either plus or minus d.c. voltages can be measured with the d.c. probe by means of a reversing switch at the meter. If 75 volt miniature diodes are built into a probe (fig. 9.3), r.f. voltages up through the VHF ranges can be measured in low powered circuits where the peak voltage is less than 75 volts. Special higher PIV diodes are available if higher voltages are to be measured, or a probe can be made with a built-in capacity divider, provided a little more circuit detuning can be tolerated. Even the small capacitance of the diodes and probe will cause a little circuit detuning.

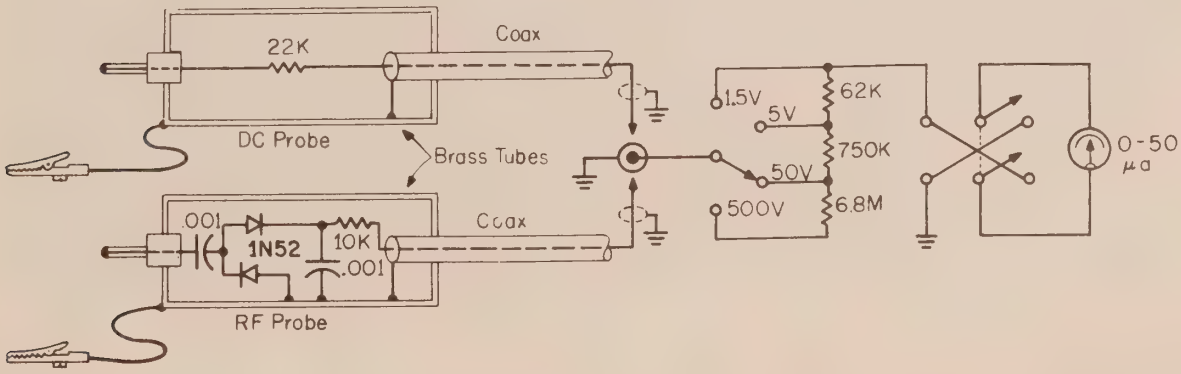

Fig. 9.4—Circuit of the meter and two probes. The r.f. probe can withstand a peak of 75 volts with the diodes used.

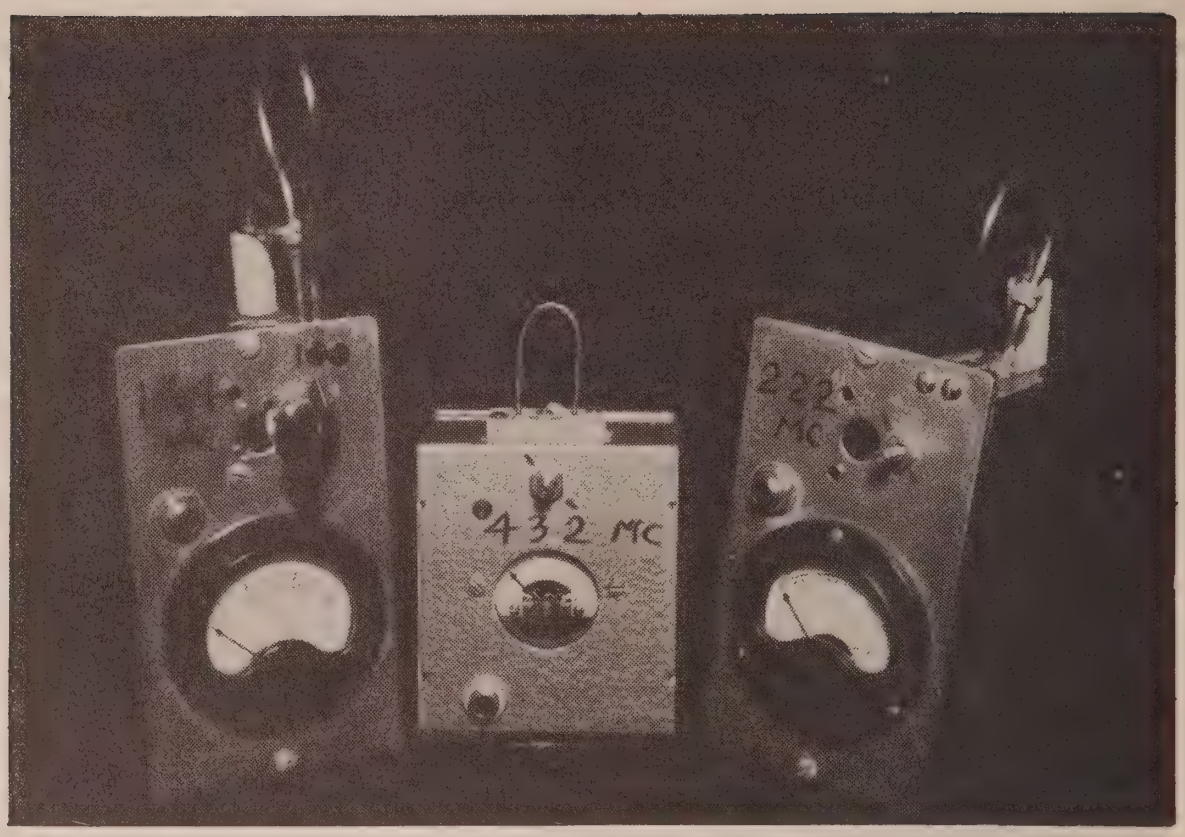

Fig. 9.5—Three typical field strength meters. The 144 mc coil is 1½" in diameter with 2½" leads and is tuned by C_1, 20 mmf and C_2, 5 mmf. The 432 mc unit (center) uses a ⅝" diameter hairpin coil, 1¾" high and is tuned by C_1, a Johnson split stator capacitor of about 7 mmf. The 222 mc unit uses a 1½" diameter coil with leads 1¼" long with only a 20 mmf tuning capacitor.

9.3 Diode Field Strength Meters and Monitors

The three simple diode field strength meters illustrated in fig. 9.5 have the general circuit arrangement of fig. 9.6. The pick-up single turn coil is coupled to the circuit under test or a pick-up antenna can be coupled to it

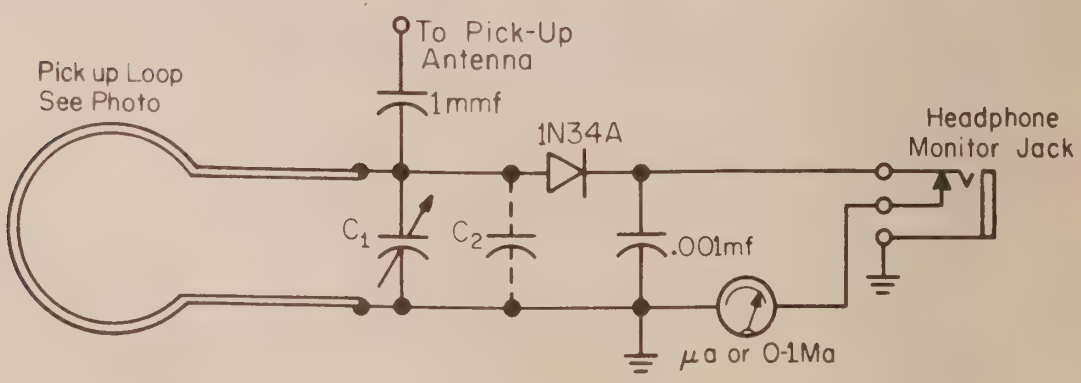

Fig. 9.6—Circuit of the single band field strength meter and monitor. The pickup loop and tuning capacitors C_1 vary for each band. The meter may range from 0-200 ua to 0-1 ma.

for field strength checks. On some bands the miniature tuning capacitor may require a fixed shunt capacitor to reach the desired frequency range. The monitor jack is very useful for checking the quality of modulation of a transmitter. The meters can be 0 to 1 milliampere types, though 0 to 200 microampere types will provide better sensitivity for field strength measurements on VHF antennas.

9.4 Transistorized Field Strength Meter

The transistor and diode device shown in figs. 9.7, 8 and 9 covers three amateur bands, 144, 220 and 432 mc. It was built into a 3 × 5 × 2 inch

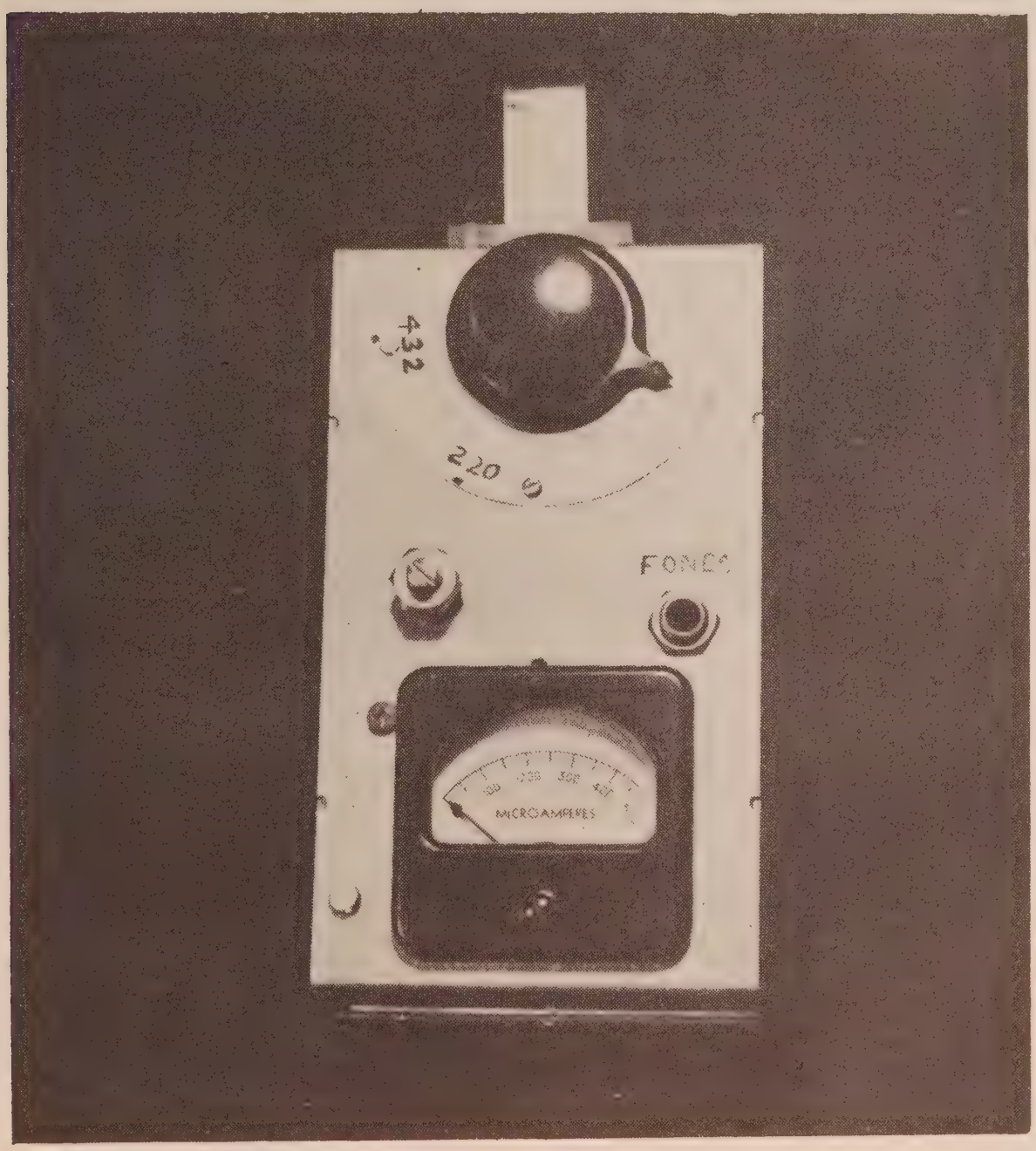

Fig. 9.7—Transistorized field strength meter for operation from 144 to 432 mc. The power is applied by closing the phone jack circuit with either phones or a jumper. The hairpin pickup loop may be seen on top.

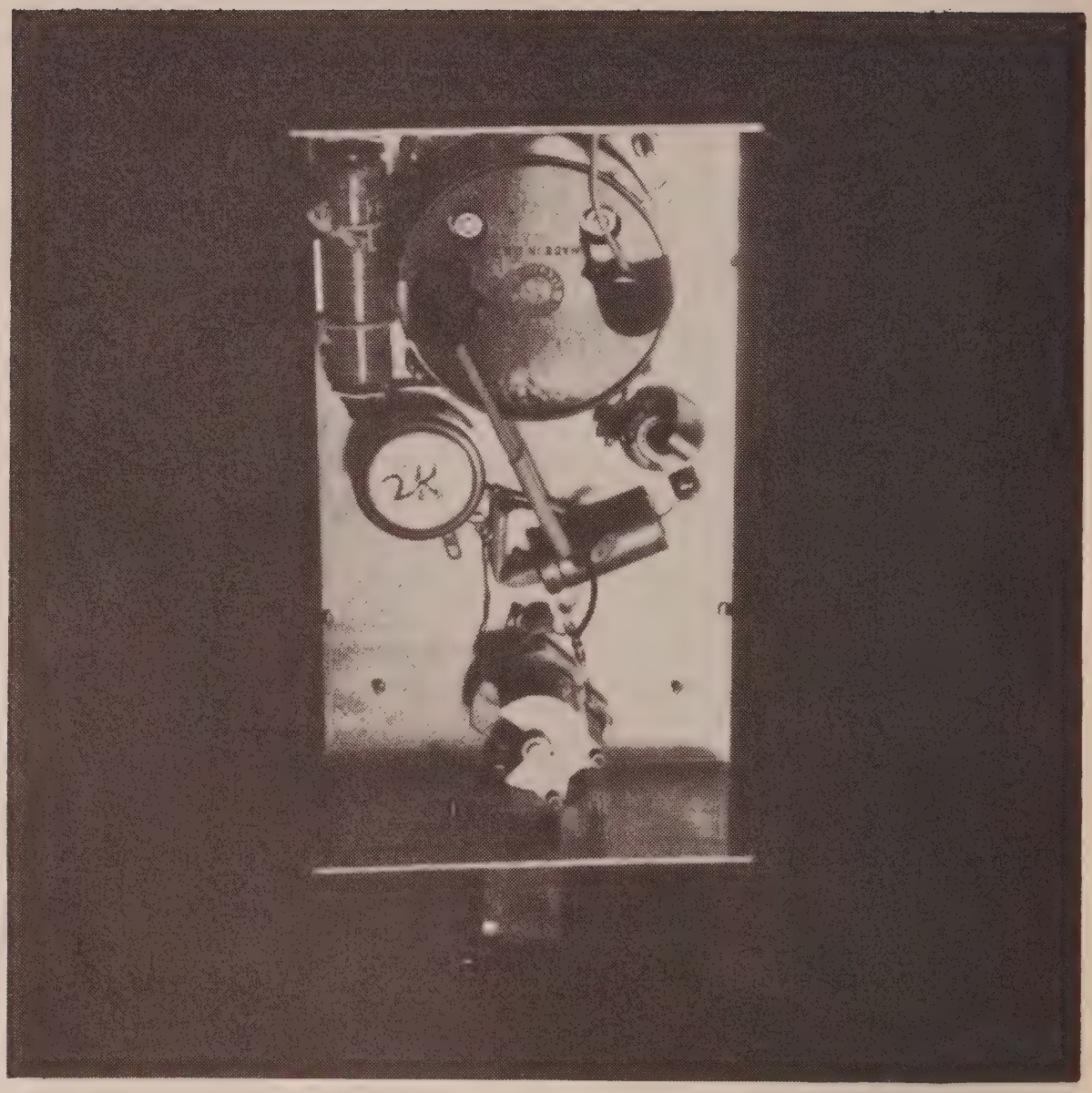

Fig. 9.8—Bottom view of the transistorized field strength meter. The battery is to the left of the meter and the sensitivity pot is below the battery. The transistor is above the emitter bypass capacitor.

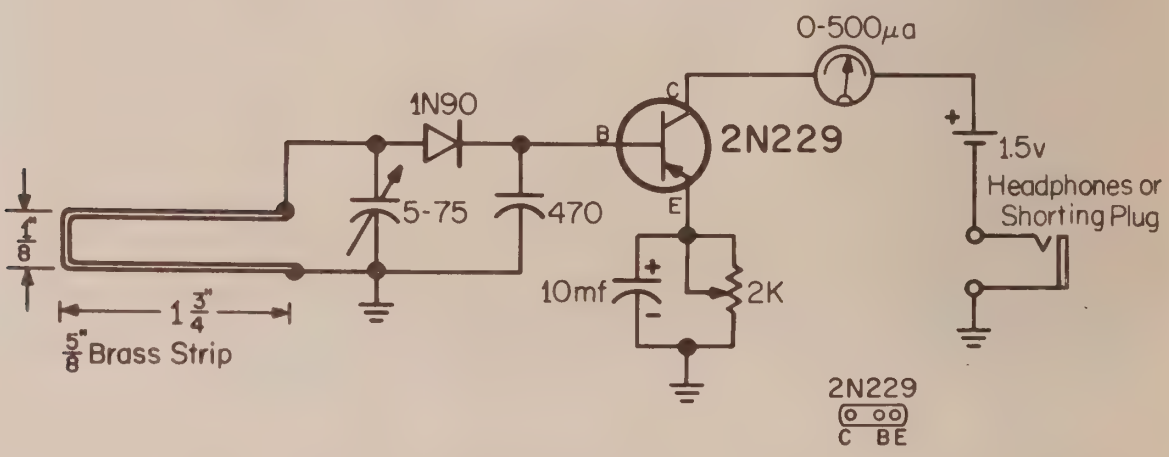

Fig. 9.9—Circuit of the transistorized field strength meter.

aluminum box. The parallel line can be made of copper or brass ⅝ inch wide. A piece is folded to make a hairpin coil ⅛ inch across and 1¾ inches long to the variable capacitor. A piece of sheet poly or lucite (with saw slots) over a hole in the end of the metal box helps to support this pickup "coil" or hairpin. A midget 5 to 75 mmf capacitor will just cover the three bands if the hairpin spacing is correct. A miniature diode 1N90 and r.f. bypass capacitor completes the radio frequency circuit. A type 2N229 transistor serves as a d.c. and a.f. amplifier. A variable resistor in series with the emitter establishes the d.c. gain and reduces the no signal meter reading to nearly zero. With a signal, the bias developed by the diode rectifier increases the transistor meter current and also permits it to function as an audio amplifier for the modulation on the carrier. In making field strength measurements, a shorting plug should be inserted in the headphone jack to complete the battery circuit to ground. An external pick-up antenna capacity coupled will be useful in field strength measurements. The sensitivity is high enough so very little coupling capacity is needed.

9.5 1296 MC Wavemeter and Noise Generator

The two devices shown in fig. 9.10 are primarily for the 1296 mc band measurements. The shorter unit is a diode noise generator which is excellent for any VHF band and functions well in the UHF bands for generating noise for use in making receiver noise measurements or circuit alignment. The

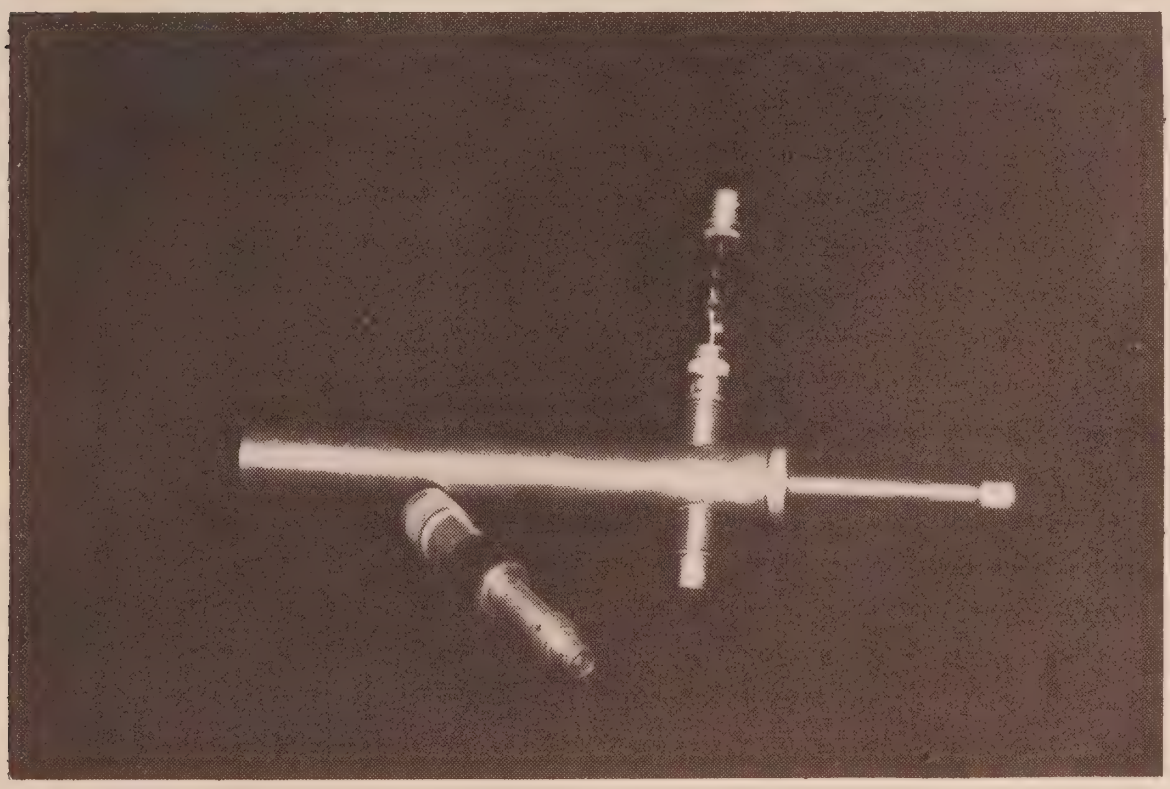

Fig. 9.10—A 1296 mc wavemeter with a diode frequency multiplier (top) connected. The wavemeter, designed by K6AXN, has an adjustable plunger (on the right) to vary the frequency. The plunger shaft may be calibrated in frequency. The unit in the foreground is a diode noise generator.

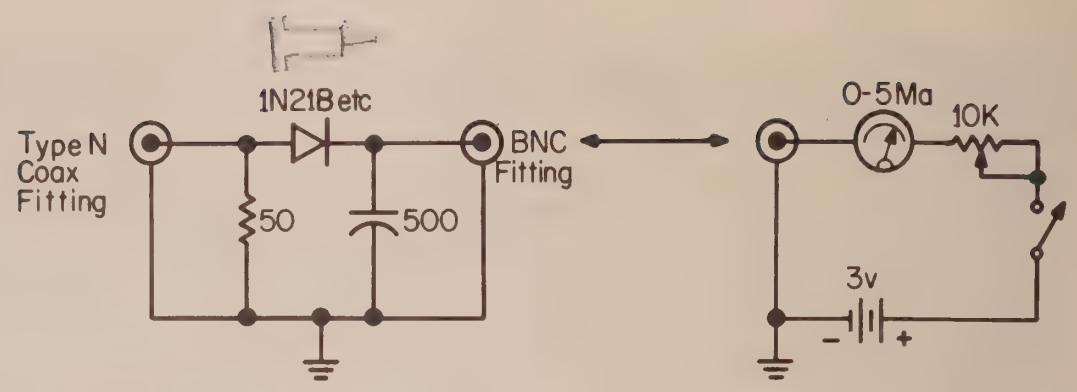

Fig. 9.11—Circuit of the diode noise generator and its metered and adjustable voltage supply. The 50 ohm resistor is a special disc type for use above 225 mc.

circuit is shown in fig. 9.11 with a suggested meter circuit. The battery polarity must be for reverse bias for noise generation with any silicon UHF diode. Diodes vary greatly in noise generation output so a selection should be made in order to find one which will produce the greatest amount of noise in a radio receiver when the device is connected into the antenna jack. An S meter reading, or a.f. output voltmeter (with receiver a.v.c. disabled) is generally used in the process of receiver alignment. The noise generator ON OFF switch is used constantly in order to make converter, parametric amplifier or receiver input circuit adjustments for best noise ratio for two switch positions. Less current through the diode for a given noise ratio reading such as 1 S point; or better, a 3 db a.f. ratio, means that the nf is being improved. The 50 ohm resistor (fig. 9.11) is a resistor disk which can be clamped inside the type N coaxial fitting. The outer metallic plated ring is grounded to the shell and the inner should contact the small end of a 1N23 diode over the pin of the holder. This pin extending through the center hole in the resistor then contacts the type N fitting center pin, with a tube socket clip as a mounting. The large end of the diode then must be bypassed with a UHF type capacitor to the jack shell. A type BNC fitting at the end of a short brass tube then is used for connection to an external milliameter and battery circuit in a separate box.

If noise diode generator tests are not to be used above 225 mc, an ordinary ¼ or ½ watt 50 ohm carbon resistor (not wire wound) can be used instead of the special disk resistor. This resistor is the termination on a piece of coaxial line connected to the input of the VHF receiver and should have as little inductance as possible.

The other longer device in fig. 9.10 is an adjustable coaxial line wavemeter designed by K6AXN. It is shown with a crystal multiplier plugged into a type BNC fitting. The dimensions are shown in fig. 9.12. Actually, this device will tune from above 1296 mc down to 432 mc. It is a high Q circuit which can be used as a filter or as a wavemeter. In wavemeter service, a UHF crystal diode is plugged into one jack and some signal is coupled with the other. If the adjustable slider (see fig. 9.10) is calibrated along its length, the unknown signal frequency can be measured

at the maximum current reading. If two or three known frequencies are checked and marked on the slider, a fairly accurate scale of frequencies can be scratched on the ¼ inch diameter tube between the small knurled knob and the guide sleeve tubing. The small links from ground to coaxial jacks are coupled together effectively only at resonance in the coaxial line cavity.

A coaxial line filter is often desirable in making measurements or in eliminating undesired frequencies. One example is to connect this unit in the coaxial line to a 1296 mc receiver with a crystal harmonic generator in series on the other side, to a 432 mc signal generator. When the device is set to a quarter wavelength resonance at 1296 mc, other frequencies, including the strong 432 mc component, will be greatly attenuated. The same set up can be used with a 144 mc signal generator to produce a 432 mc signal for this band. The plunger is nearly all the way in for 432 mc resonance. The harmonic multiplier adds a lot of attenuation and the harmonic generator is a square law device, so the signal generator microvoltor calibration means nothing except for reference points.

Accessories for this coaxial circuit device are shown in fig. 9.12. Type BNC fittings and short lengths of brass tubing are used in constructing these accessories.

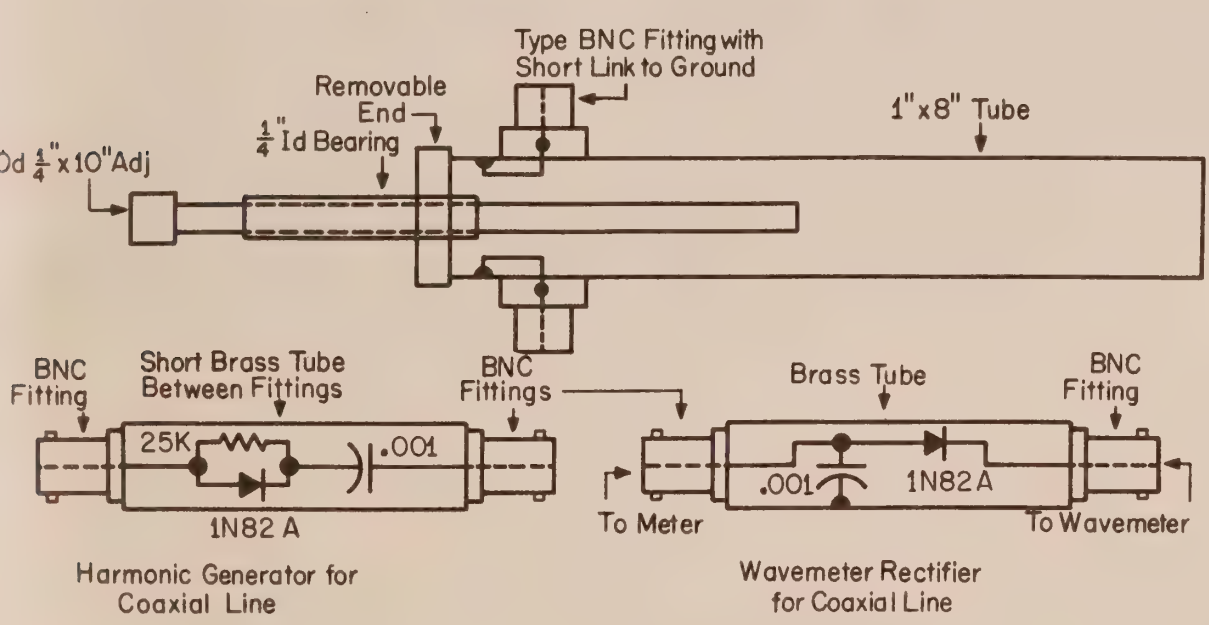

Fig. 9.12—Construction details for the 1296 mc wavemeter and accessories. The units are, a harmonic generator and wavemeter rectifier, both for coaxial lines.

9.6 SWR Meters

The diode r.f. current measuring unit shown in figs. 9.13 and 14 is useful for checking standing wave effects in flat or tubular twinlead, and in ½ or 1 inch parallel line feeders. It is very sensitive, which means that it can be a

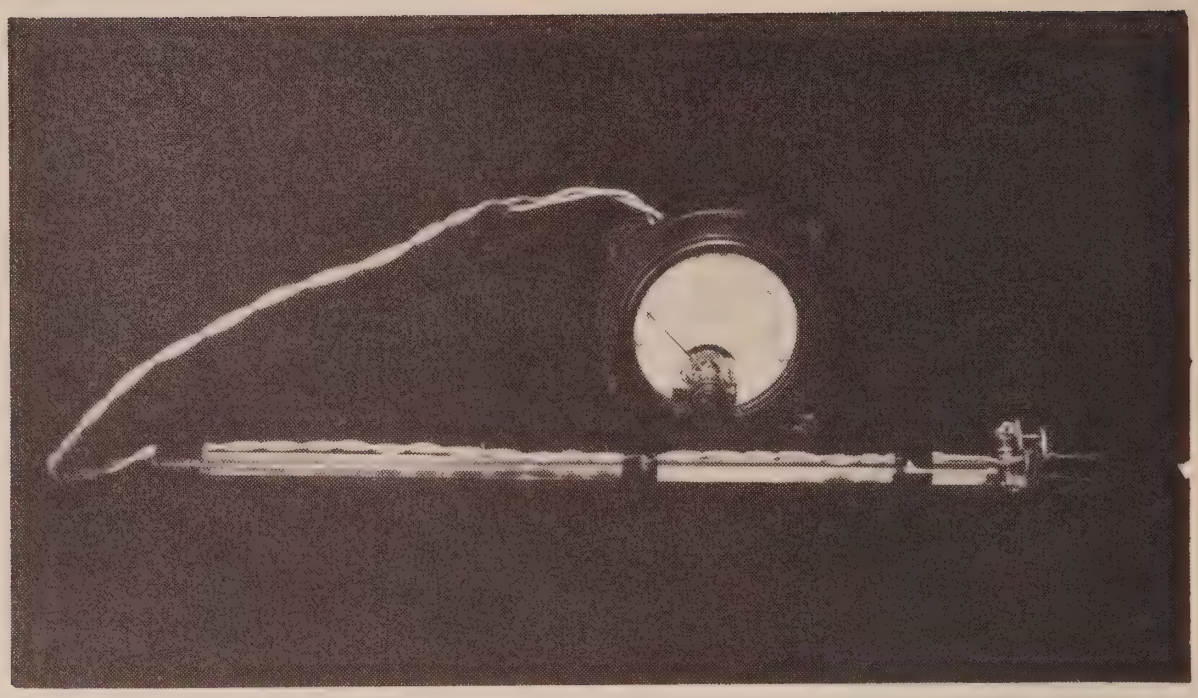

Fig. 9.13—Simple s.w.r. meter. The r.f. components are at one end of the rod and may be placed parallel with the transmission line. Because of the high sensitivity, the unit may be kept a few inches away thus not upsetting the s.w.r. of the line.

few inches away from the transmission line and be moved along parallel to the line without altering the s.w.r. values existing in the line. The physical dimensions were made small enough for use at 1296 mc, where it may serve as a relative power output meter by propping it up near the feeder line or balun. All s.w.r. meters finally serve this purpose since it provides a visual monitor of the transmitter r.f. output. In fig. 9.13, the r.f. parts are mounted at one end of a polystyrene rod which serves as a handle and support.

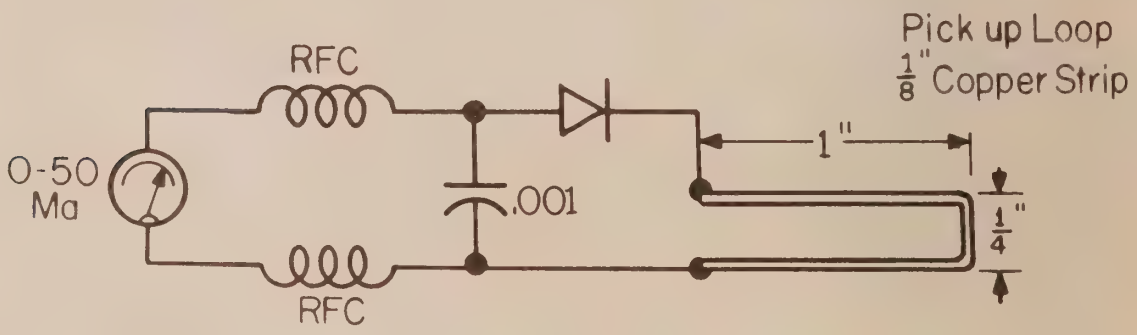

Fig. 9.14—Circuit of the s.w.r. meter for parallel line measurements.

The s.w r. meter illustrated in fig. 9.15 is suitable for use in any band from 50 mc to 432 mc. The sensitivity increases with frequency so any power flow or s.w.r. calibration is only good at one frequency. Since these s.w.r. meters are simple to construct, one should be built for each band and left permanently in the coaxial line to the antenna. The meters can be 0 to 1 or even 0 to 2 milliamperes unless the transmitters are very low powered. One microammeter unit can be made to serve for several units for s.w.r. measurements where the forward current reading is usually set to full scale and the reverse current reading is made as low as possible by impedance and tuning adjustments at the antenna. For monitoring r.f. power through the line, less than full scale reading of forward current is usable, so milliammeters can be used.

The r.f. portion consists of a short trough line between two coaxial jacks fitting mounted in 3 × 3 × 2 inch aluminum box, or similar small box. The transmission line impedance inside this box should have the same impedance as the coaxial line to the antenna. Usually this is 50 ohms, though 75 ohm cable is sometimes used. A ⅝ inch trough line is grounded to each coaxial fitting. A ¼ inch diameter piece of tubing connects to the center pin of each fitting. A ⅝ inch trough and 3/16 inch tube center line is suitable for 75 ohm

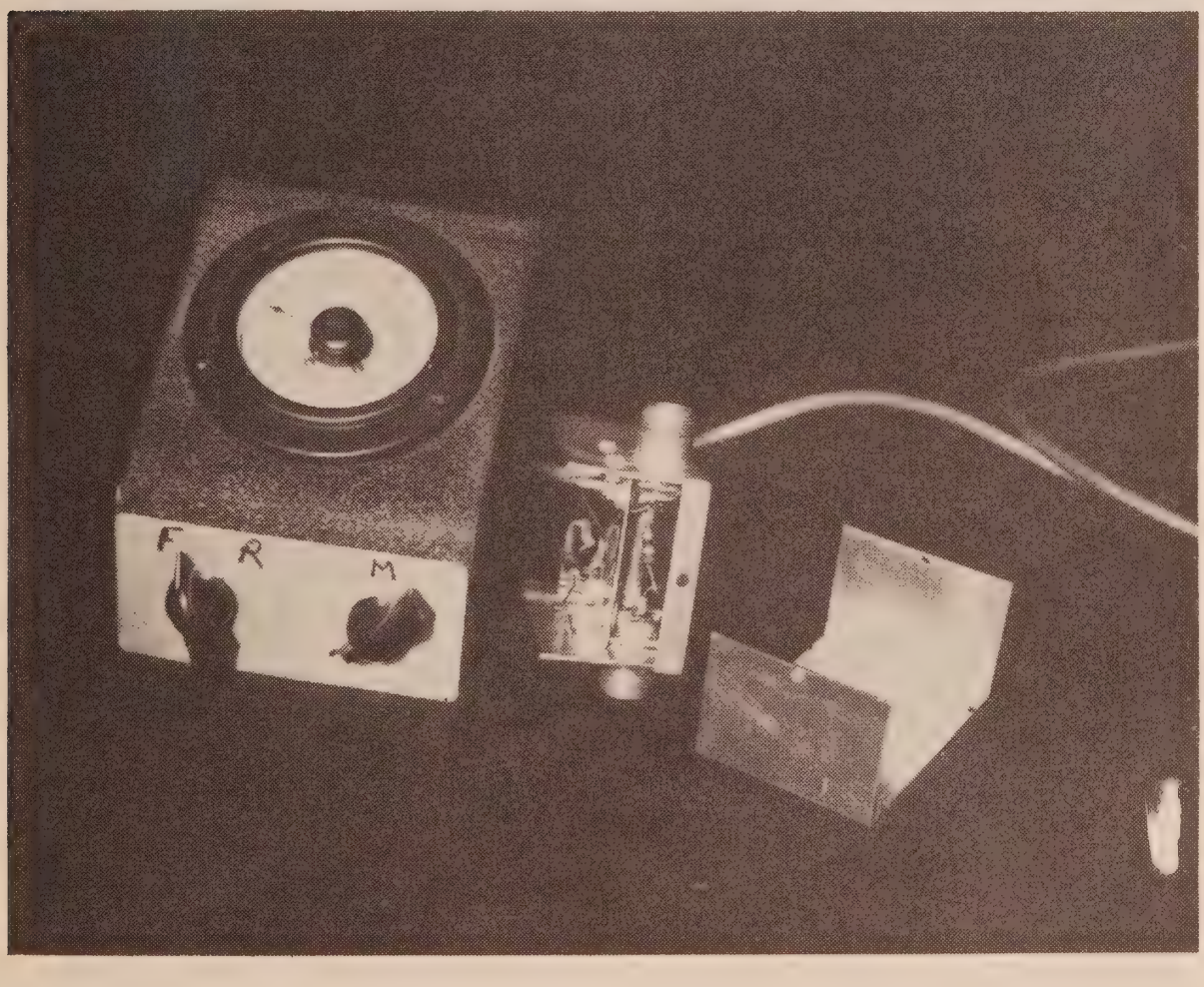

Fig. 9.15—S.w.r. meter suitable for use in any band from 50 mc up. The transmission line trough may be made to match 50 or 75 ohm coax.

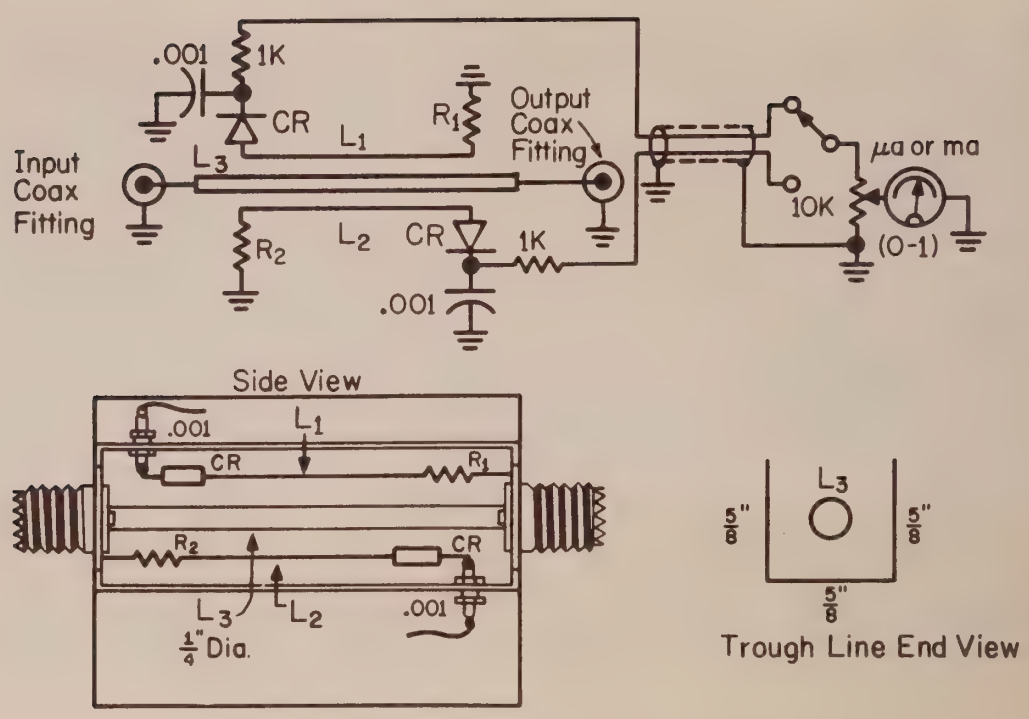

Fig. 9.16—Circuit and construction details of the s.w.r. meter shown in fig. 9.15.

units. The other dimensions and values are shown in fig. 9.16. The diodes should be miniature type, matched for forward and back resistance in an ohmmeter check. The resistors R_1 and R_2 should be small carbon or metallized types of equal value as checked in an ohmmeter. The optimum value for perfect s.w.r. null balance depends upon the size and spacing of the pickup wire L in fig. 9.16, with respect to the trough walls and the inner conductor. Values in the range of 50 to 120 ohms may be needed to get the same reading with the whole unit reversed in the line and the same reversed meter reading in each case. A UHF terminating resistor rated at 10 watts or so may be used as a dummy antenna load with s.w.r. of unity. This means full scale forward current reading and zero reading on the reversed current reading.

9.7A Frequency Markers

The vacuum tube crystal oscillator and diode harmonic generator illustrated in fig. 9.17 is extremely useful in spotting the exact 1 mc marker signals in any VHF receiver. The harmonics of a one megacycle crystal are strong enough to use up through the 432 mc band when the unit's output lead is plugged into the antenna coaxial fitting on the 432 mc converter. The 1 mc marker signals then give reference points on a communication receiver (as an i.f. system) so the operator can tell the approximate frequency of the VHF or UHF signals being received.

The dual triode type of crystal oscillator uses crystal series resonance and a series variable capacitor for zero beating this oscillator with WWV transmissions. The frequency stability is usually much better with a series

resonant arrangement than with parallel resonance single tube oscillators. A drift of a few cycles in the "DC" bands (3½ to 30 mc) is not much of a problem, but when the few cycles drift is multiplied several hundred times (for VHF use) it becomes very annoying. The circuit in fig. 9.18 functions very well with a 2C51 dual triode and should work equally well with a 12AT7 dual triode (with different socket connections). The 2½ millihenry r.f. choke used as a resonant circuit at 1 mc may need turns removed if the unit does not oscillate. The frequency adjusting series capacitor should be mounted well below the chassis top so as to have an insulated bakelite shaft extension. An adjusting screwdriver near this capacitor makes it difficult to zero beat the frequency against WWV signals.

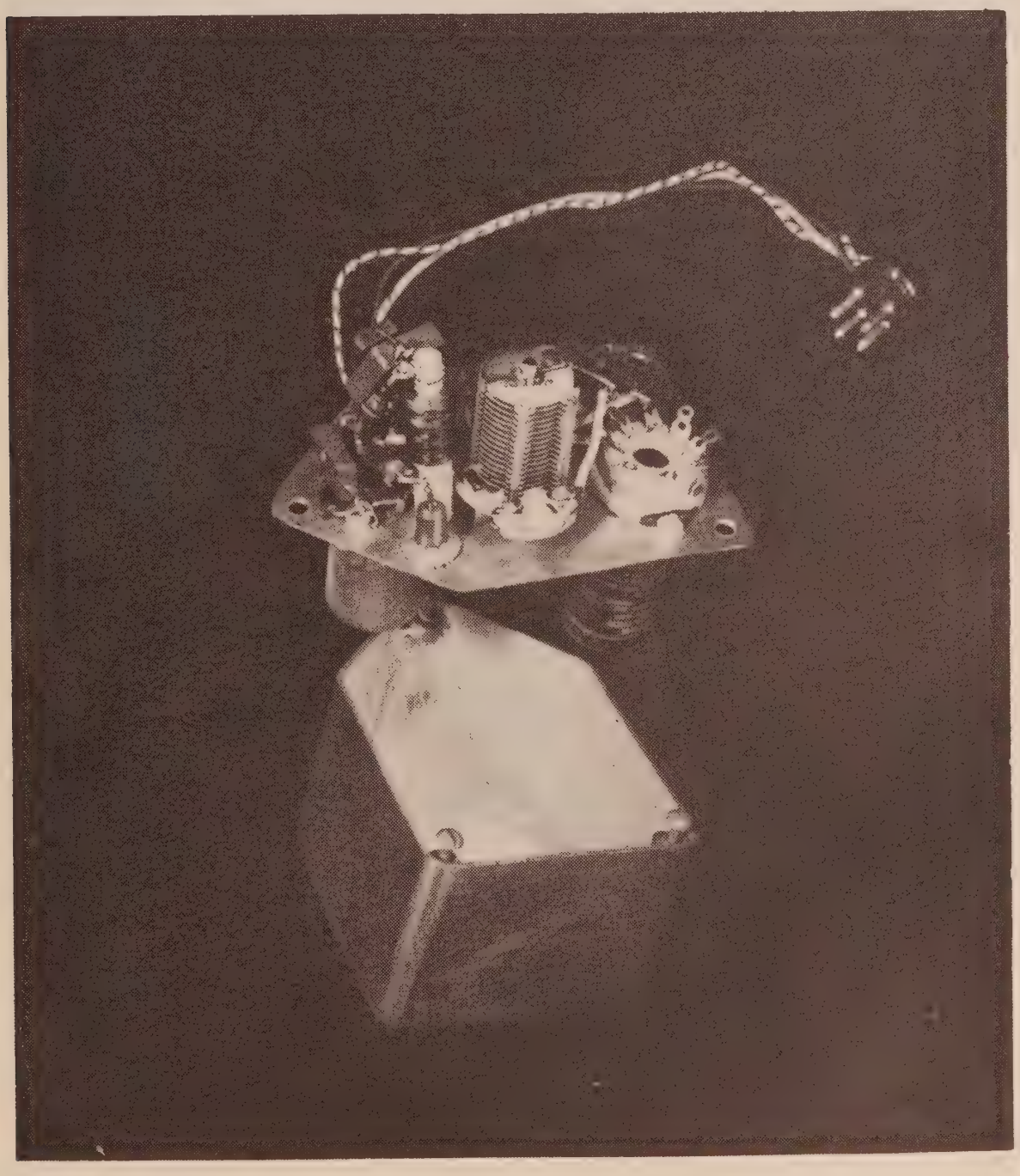

Fig. 9.17—Bottom view of a harmonic signal marker employing a 1 mc crystal. The tuning capacitor is used to zero beat the crystal against WWV.

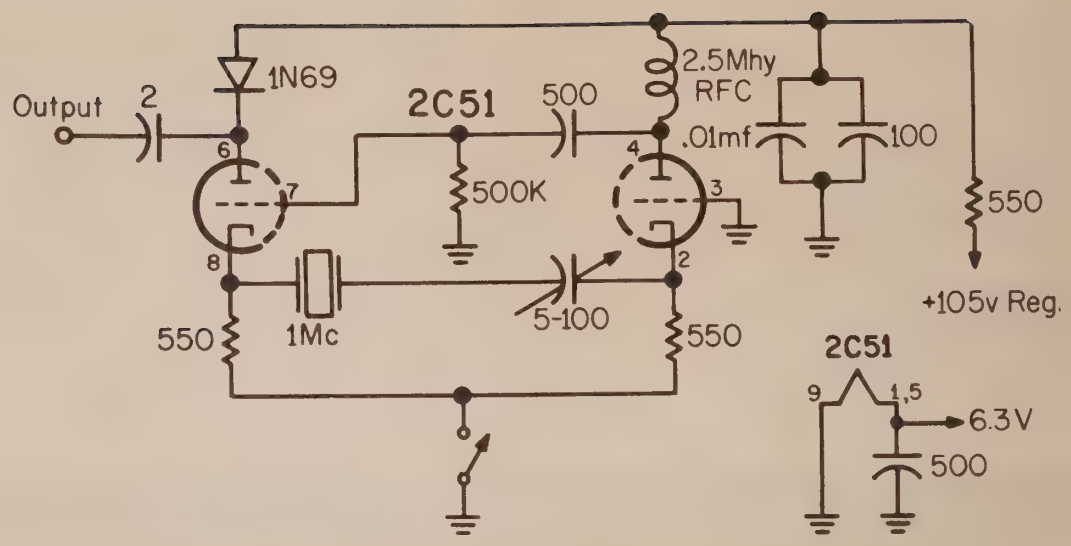

Fig. 9.18—Circuit of the harmonic generator. While designed for use with a 2C51 dual triode a 12AT7 will also work well.

9.7B Transistor Frequency Marker

The single 2N233 transistor crystal oscillator in fig. 9.21 furnishes signal markers every 500 kc up through 55 mc. The unit is illustrated in figs. 9.19 and 20. It was built into a 3 × 5 × 2 inch aluminum box. A surplus "Channel 70" 500 kc crystal is connected between the emitter and collector of a 2N233 transistor. The 500 kc parallel tuned circuit in the lead to the base of the transistor produces a feedback circuit which also is used to zero beat the crystal with WWV. The circuit values are listed in fig. 9.21.

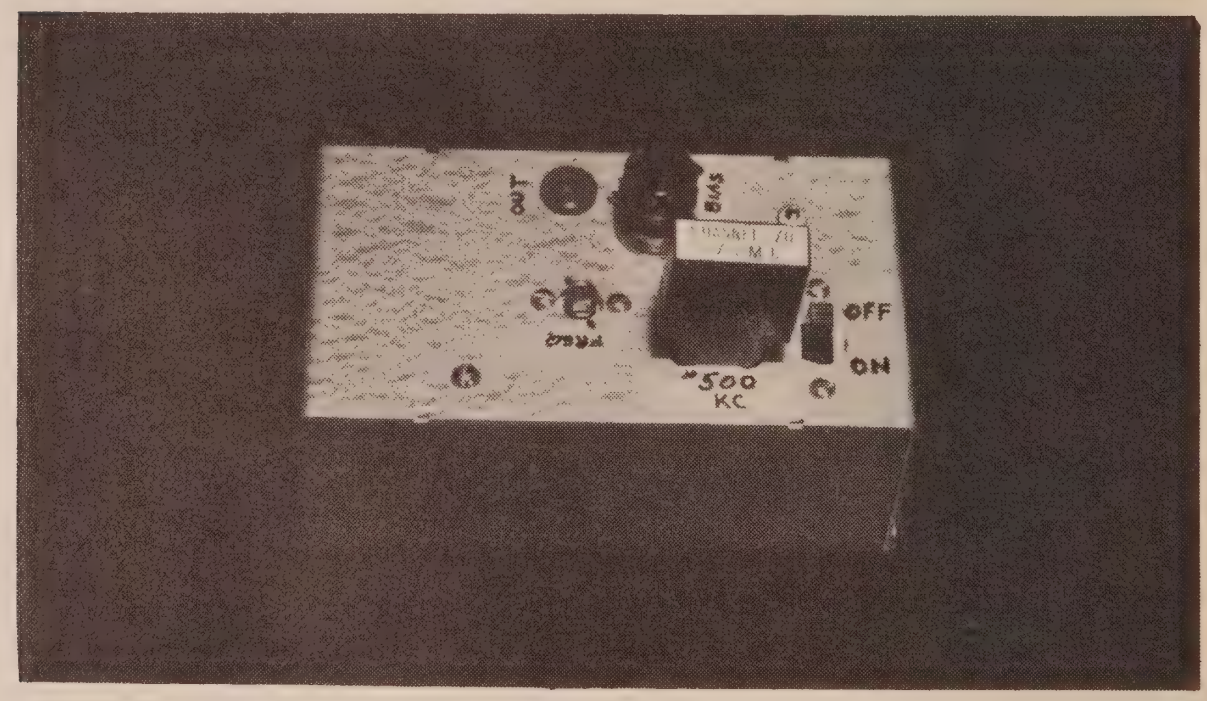

Fig. 9.19—A transistorized 500 kc frequency marker. A surplus Channel 70 crystal is used.

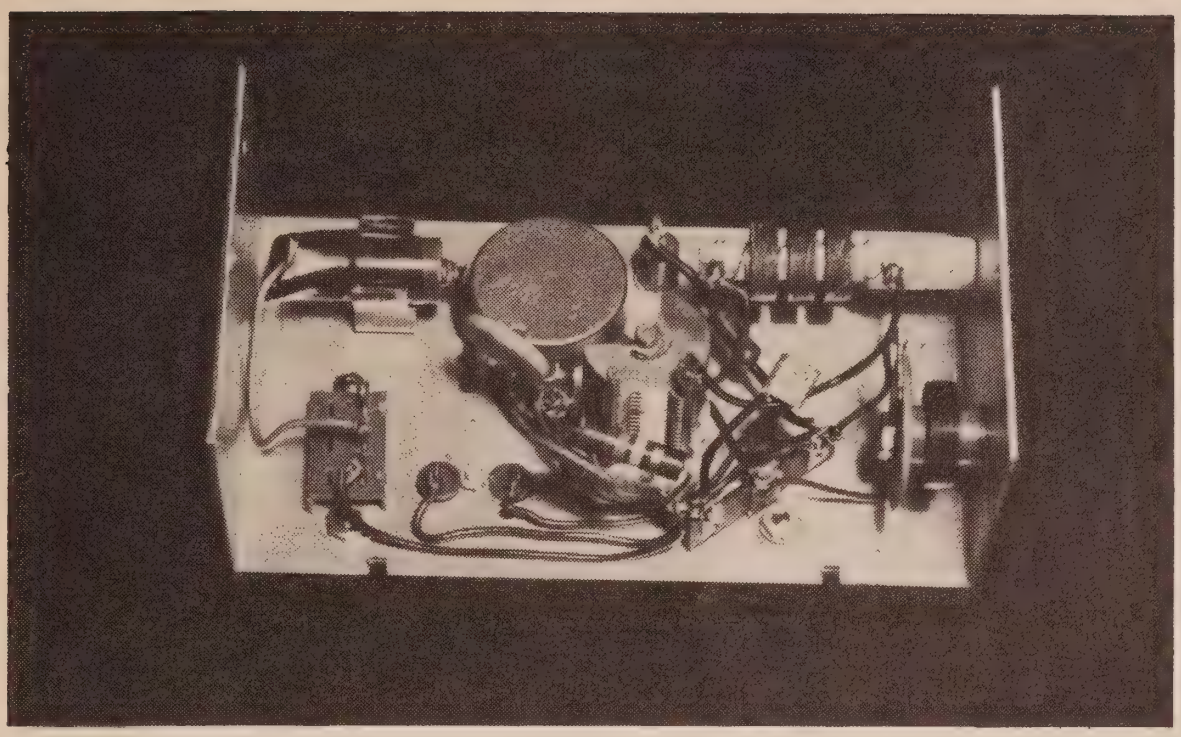

Fig. 9.20—Bottom view of the 500 kc marker. The 2N233 transistor may be seen to the right of the tuning capacitor.

9.7C 2 Transistor Signal Marker

This transistorized crystal oscillator is similar to the vacuum tube unit previously described. It is a better type of oscillator than that of fig. 9.21 and furnishes usable harmonics up through the 220 mc band. In common with other transistor oscillators, the transistors should not be near other units such as transmitters which may get hot and change the operating temperature of the transistors. Small room temperature changes are not

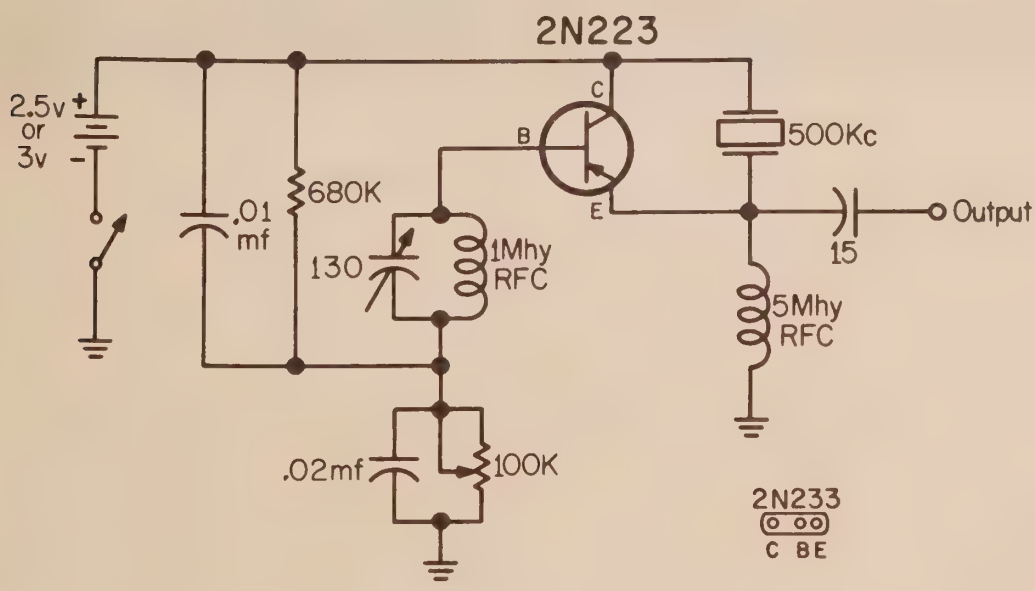

Fig. 9.21—Circuit of the 500 kc marker. The tank circuit in the transistor base is used to zero beat the oscillator against WWV.

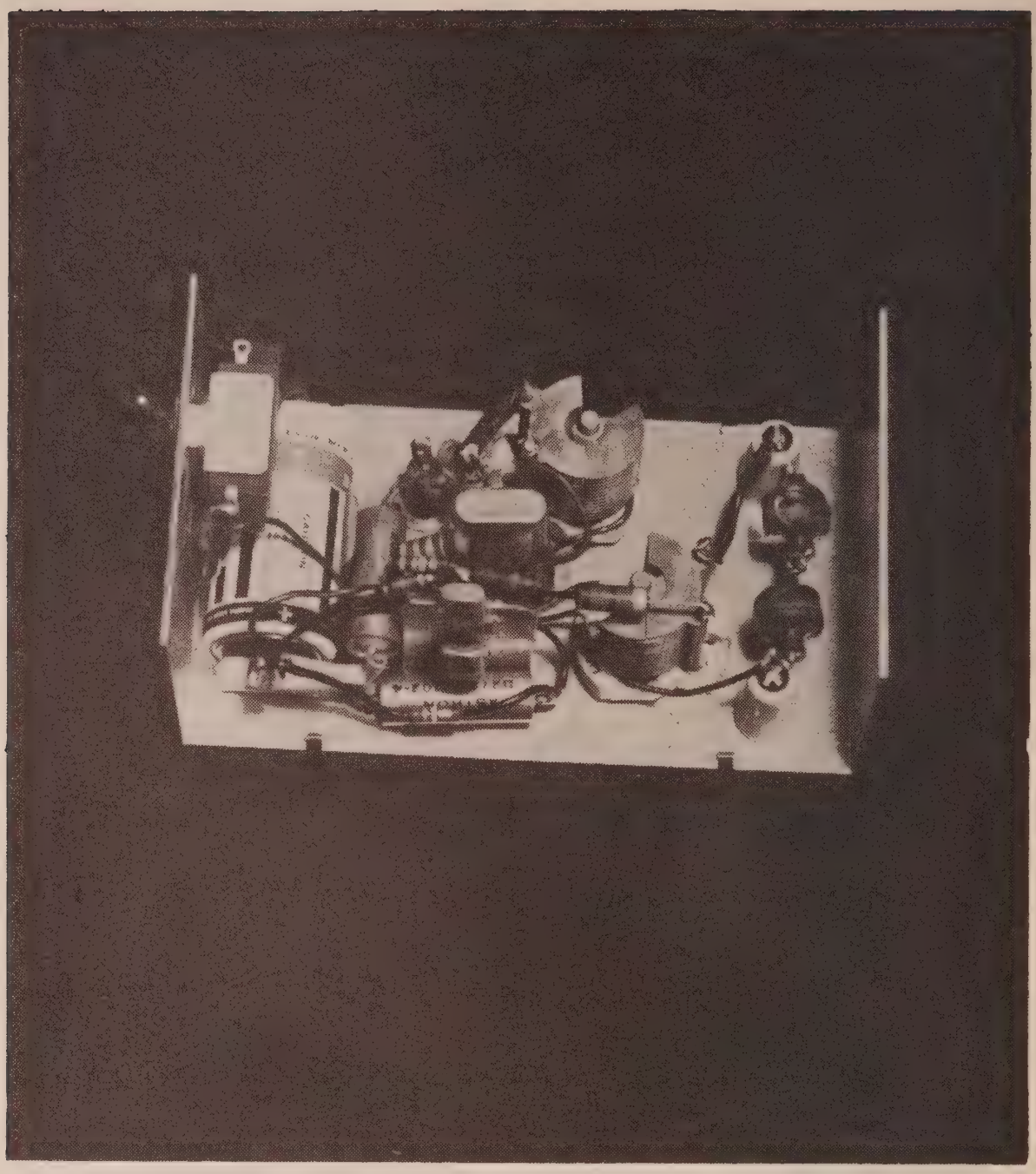

Fig. 9.22—Bottom view of a 2 transistor 1 mc marker oscillator. This unit will provide useful markers up through 220 mc with a 9 volt supply.

troublesome. The bottom view of this signal marker is shown in fig. 9.22 and the circuit diagram in fig. 9.23. This oscillator works fine for 50 and 144 mc markers with a 4 volt battery. When 220 mc signal markers are needed, this is changed to a 9 volt miniature battery which then increases the harmonics to good values through 225 mc. Very weak markers are present at 432 mc but the receiver has to be pretty good to make them noticeable.

The 1 mc crystal and variable series capacitor is connected between emitters of the two 2N233 transistors. Series resonance in the crystal is utilized and the variable series capacitor is used to zero beat the oscillator with WWV signals. The 1 mc circuit in one collector is made by connecting two .1 millihenry r.f. chokes in series and a small variable capacitor of 10 to 130 mmf across it. This circuit is tuned on the high side of 1 mc. Other circuit values are shown in fig. 9.23.

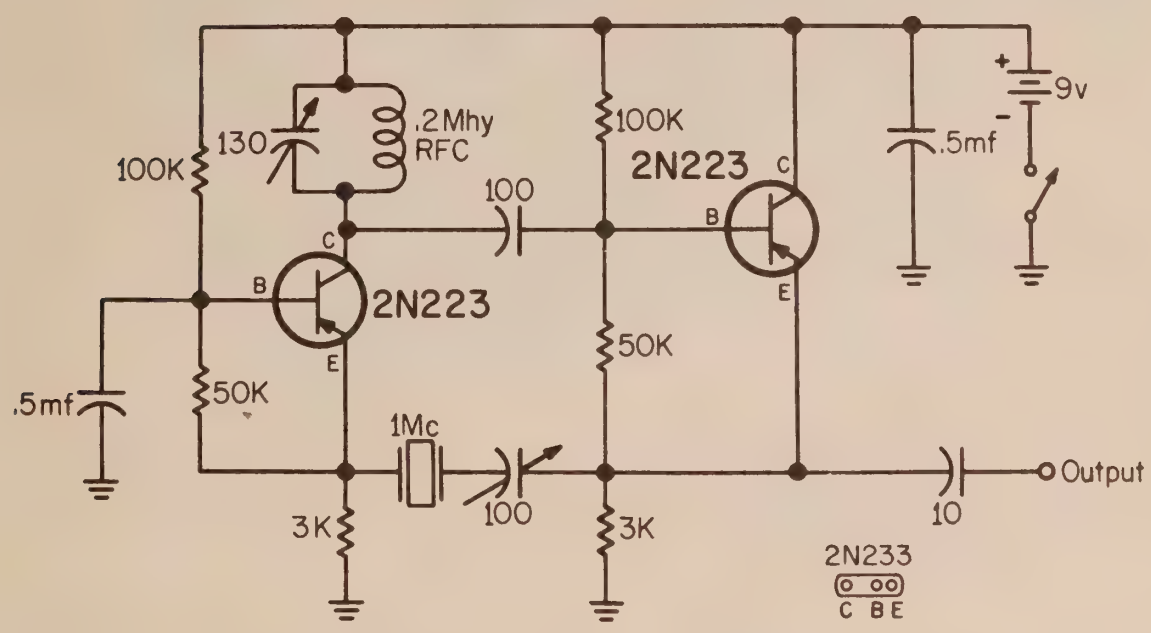

Fig. 9.23—Circuit of the 2 transistor 1 mc signal marker. The capacitor in series with the crystal is used to zero beat the oscillator against WWV. When used for 50 and 144 mc a 4 volt supply is adequate. A nine volt supply produces output on 220 mc.

9.8 Transistor Audio Oscillator

A simple transistor audio oscillator is useful for code practice or for m.c.w. (modulated continuous wave) telegraphy in VHF work. A 2N229 transistor is wired up as shown in fig. 9.24. The miniature 2½ volt (mercury type) battery, 3 small resistors, two paper capacitors, transistor and jacks are all mounted in a 2 × 2 × 2 inch aluminum box. For m.c.w. or speech amplifier tests, a single high impedance magnetic headphone is plugged into the unit and the microphone simply rests on top of the headphone. The audio frequency depends upon the inductance of the headphone and the

two capacitors which shunt it. The audio tone is usually between 600 and 1000 cycles with the constants shown in fig. 9.24 and with one or a pair of magnetic 2000 ohm headphones plugged into it.

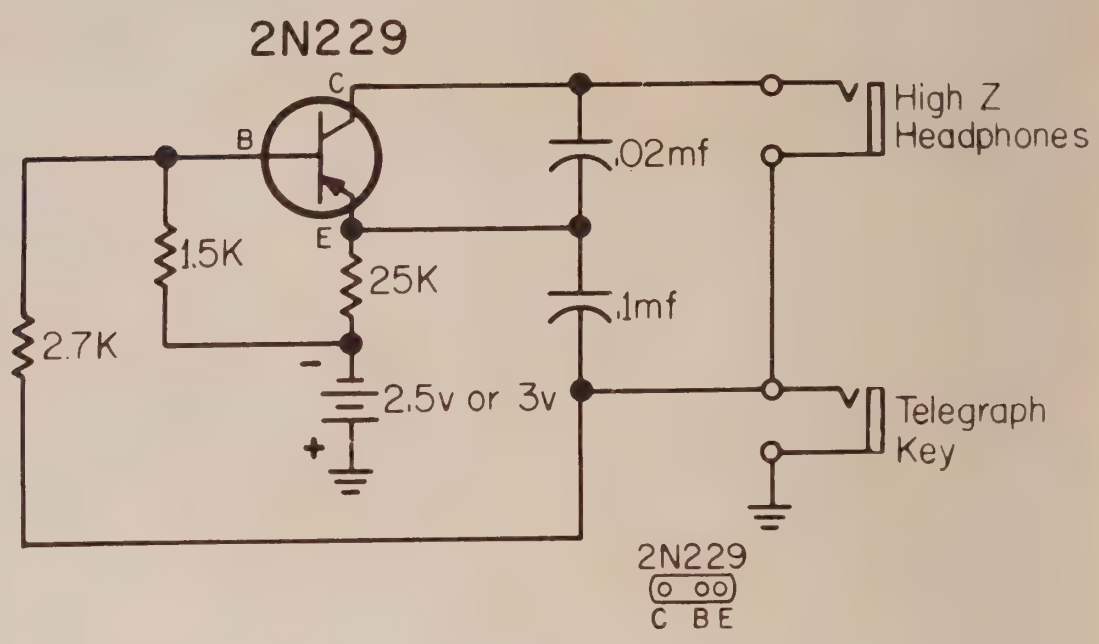

Fig. 9.24—Circuit of a simple transistorized audio oscillator useful for code practice or m.c.w.

THE IDEAL RECEIVER FOR USE WITH VHF CONVERTERS!

GENERAL-COVERAGE AT ITS SSB BEST!

NEW HAMMARLUND HQ-180

- ★ 18-tube, triple-conversion, superheterodyne with automatic noise limiter.
- ★ 540 KCS to 30.0 MCS with bandspread on 80, 40, 20, 15 and 10 meter amateur bands.
- ★ Razor-sharp slot filter with up to 60db attenuation. Separate linear detector. Selectable Sideband. Controlled BFO. Selectable AVC. Built-in 100 KCS calibrator.

They said it couldn't be done — **professional-quality performance SSB in a general-coverage receiver** at a **price less than ordinary SSB general-coverage receivers.** Hammarlund did it! The all-new Hammarlund HQ-180 goes far beyond any previous concept in value and performance. See it and try it right now at your Hammarlund dealer . . .

$429.00

*Telechron clock timer optional, $10 extra.

WRITE FOR COMPLETE SPECIFICATIONS . . .

HAMMARLUND

Established 1910

MANUFACTURING COMPANY, INC.,
an affiliate of Telechrome
460 West 34th Street, New York 1, N.Y.

NOW!
TWO ANTENNAS IN ONE*

*another *FIRST* from *FINCO*

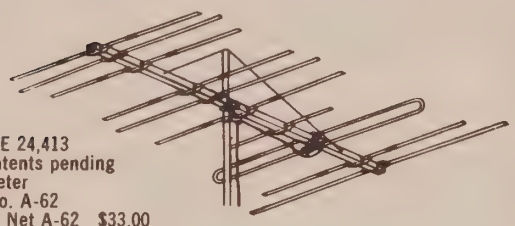

Patent RE 24,413
Other patents pending
6 & 2 Meter
Model No. A-62
Amateur Net A-62 $33.00
Stacking Kit AS-62 $2.19

The Only Single Feed Line

6 & 2 METER

COMBINATION YAGI ANTENNA

from FINCO

- Heavy Duty Square Aluminum Boom, 10 Ft. Long
- All Elements are Sleeve Reinforced And Completely Pre-assembled With "Snap-Out" Lock-Tite Brackets
- Boom Suspension Rods Are Supplied Completely Pre-assembled, Ready To Be Snapped Into Upper End Of Mast

ON 2 METERS:
18 Elements
1—Folded Dipole Plus Special Phasing Stub
1—3 Element Collinear Reflector
4—3 Element Collinear Directors

ON 6 METERS:
Full 4 Elements
1—Folded Dipole
1—Reflector
2—Directors

A6-4 6 Meter 4 Element
Amateur Net $17.16
Stacking Kit AS-6 $2.19

A2-10 2 Meter 10 Element
Amateur Net $11.88
Stacking Kit AS-2 $1.83

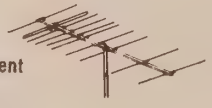

A1¼-10 1¼ Meter 10 Element
Amateur Net $11.88
Stacking Kit AS-1¼ $1.26

See Your *FINCO* Distributor
or write for Catalog 20-226 to:
THE FINNEY COMPANY
Dept. 19, 34 W. Interstate St., Bedford, Ohio

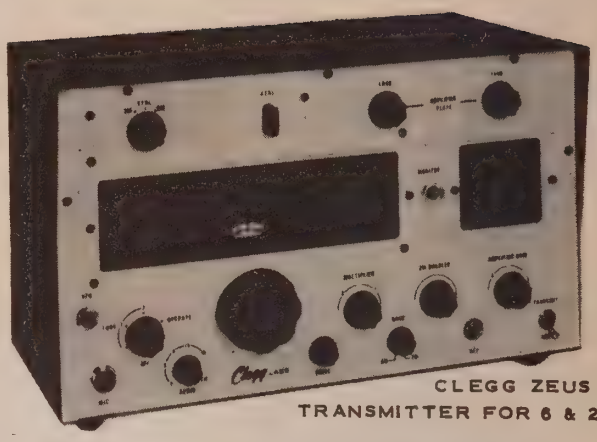

CLEGG ZEUS
TRANSMITTER FOR 6 & 2

Have you heard about these new Clegg advances in VHF?

Spectacular advances in the field of electronics in recent years are presenting outstanding opportunities to manufacturers and the serious VHF amateur alike.

Research and development at Clegg Laboratories have played a consistent role in the design and engineering of superior VHF equipment for the serious operators on these bands. From this continuing research have come such products as the Clegg ZEUS transmitter for 6 and 2 meters, the INTERCEPTOR VHF receiver, the 99'er transceiver for 6 meters, and the 2x4 audio oscillator.

Each of these units is outstanding in it's field. The ZEUS for example, provides 185 power-packed watts on both 6 and 2 meters. Automatic feedback control of low level speech clipping permits 120% modulation peaks for maximum talk power without splatter. The INTERCEPTOR receiver, using the latest nuvistors in r.f. stages, provides a noise figure of less than 2 db. and sensitivity of better than .25 microvolts.

The 99'er provides a complete VHF station for the ham with a limited budget.

Ask your distributor about these new Clegg VHF units today. Or write for complete information.

Clegg LABORATORIES
RT. 53, MT. TABOR, N. J. • OAkwood 7-6800

CLEGG 99'ER
6 METER TRANSCEIVER

Amateur Crystals

1000 KC to 137 MC - .01% TOLERANCE

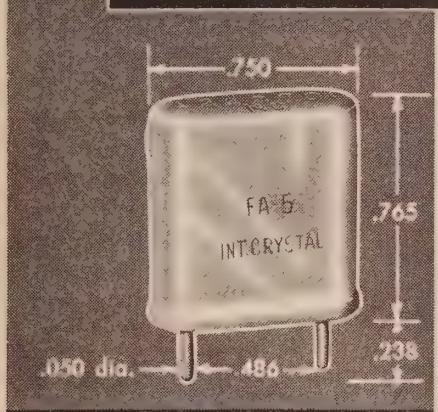

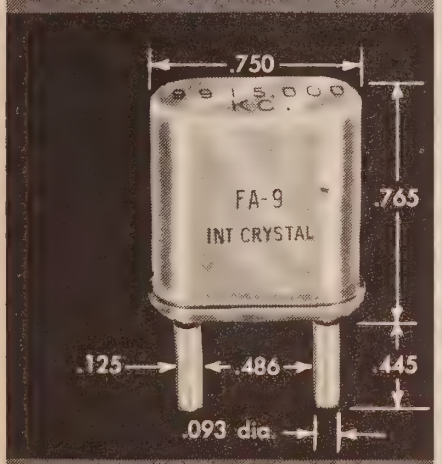

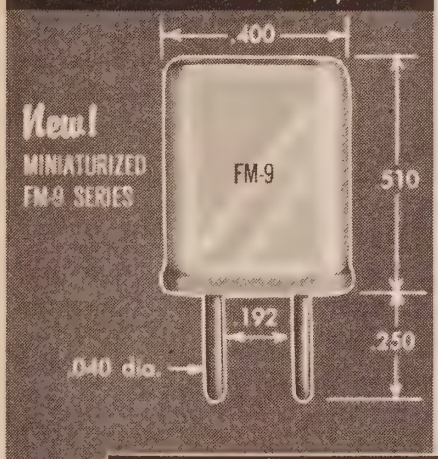

Wire mounted, plated crystals for use by amateurs and experimenters where tolerances of .01% are permissible and wide-range temperatures are not encountered.

Just any crystal in any oscillator will NOT combine to produce spot frequencies. These crystals are designed to operate into a 32 mmf load on their fundamental between 1000 kc and 15000 kc. Overtone crystals operate at anti-resonance on 3rd mode and series resonance on 5th and 7th mode crystals.

- **HOLDERS:** Metal, hermetically sealed. FA-5 and FA-9 are HC/6U pin type while the FM-9 is an HC/18U pin type.
- **FREQUENCIES** (Specify crystal type and frequency when ordering.)

	FA-5 and FA-9	Price	FM-9	Price
Fundamental	1000 - 1499 kc	$ 5.75	Not available	
	1500 - 1799 kc	$ 4.95	Not available	
	1800 - 1999 kc	$ 4.40	Not available	
	2000 - 9999 kc	$ 3.30	8000 - 9999.999 kc	$ 5.00
	10000 - 14999 kc	$ 4.40	10000 - 15000 kc	$ 5.50
	15000 - 20000 kc	$ 5.50	15001 - 19999.999 kc	$ 6.50
Overtone (3rd)	10 - 14.99 mc	$ 4.40	Not available	
	15 - 29.99 mc	$ 3.30	20 - 39.99 mc	$ 5.00
	30 - 59.99 mc	$ 4.40	40 - 59.99 mc	$ 5.50
Overtone (5th)	60 - 75.99 mc	$ 4.95	60 - 89.99 mc	$ 6.50
	76 - 99.99 mc	$ 7.15	90 - 100 mc	$ 8.50
	Not available		101 - 110 mc	$10.00
Overtone (7th)	100 - 137 mc	$ 9.35	Not available	

Overtone crystals are calibrated on their overtone frequency. They are valuable for receiver-converter applications and are NORMALLY NOT UTILIZED IN TRANSMITTERS, since only a small amount of power is available under stable operating conditions.

- **CALIBRATION TOLERANCE:** ± .01% of nominal at 30° C.
- **TEMPERATURE RANGE:** —40° to + 70° C. ± .01% of frequency at 30° C.
- **DRIVE LEVEL:** Recommended, maximum 3 milliwatts for overtones; up to 80 milliwatts for fundamentals, depending on frequency.

ONE DAY PROCESSING . . .

Orders for less than five crystals will be processed and shipped in one day. Orders received on Monday through Thursdays will be shipped on the day following. Orders received on Friday will be shipped the following Monday.

WRITE FOR 1961 CATALOG **FREE!**

INTERNATIONAL CRYSTAL MANUFACTURING CO., INC.

18 NORTH LEE • OKLAHOMA CITY, OKLA.

THE CQ HAM MART

SIDEBAND HANDBOOK

Cat. #103. Written by Don Stoner, W6TNS, was almost one full year in the preparation of this terrific volume. This is *not* a *technical* book. It explains sideband, showing you how to get along with it . . . how to keep your rig working right . . . how to know when it isn't . . . and lots of how to build-it stuff, gadgets, receiving adaptors, exciters, amplifiers. $3.00.

MOBILE HANDBOOK

Cat. #105. This new Mobile Handbook by Bill Orr, W6SAI, has been getting raves from all of the experienced mobile operators. There is all sorts of information in here that cannot be found anywhere else. This is NOT a collection of reprints.

$2.95

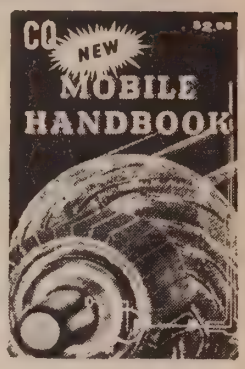

COMMAND SETS

Cat. #106. This IS a collection of reprints, containing all of the available information on the conversion of the popular "Command" transmitters and receivers into good ham transmitters and receivers. Invaluable for Novice, Technician, General, Advanced and Extra class operators. $1.50

HI-FI BOOK

Cat. #101-1. The most up-to-date information on Hi-Fi *Amplifiers, Preamps and Associated Circuits.* Complete, down-to-earth, non-mathematical explanations that help the Hi-Fi enthusiast and technician get the full value from Hi-Fi, as well as its essential components. Over 130 pages of Educational Reference. More than 100 illustrations. $2.50

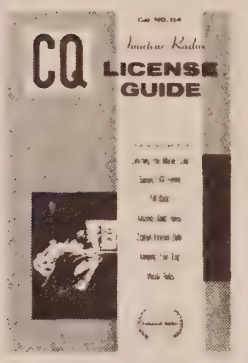

CQ LICENSE GUIDE

Cat. #114

212 pages of everything the Amateur must have to get his license and progress toward the general class ticket. Plus many additional pages of vital information for the ham operator. All this for only $2.50.

SURPLUS SCHEMATICS

Cat. #117

This is a book literally loaded with schematics for all the currently popular pieces of surplus gear. Trying to figure out the circuitry cold turkey can be many times more difficult than the most involved puzzle, and purchasing a single instruction book can run as high as $3. 50. Why knock yourself out when you can have a book with complete coverage on hand in your library? All this for only $2.50.

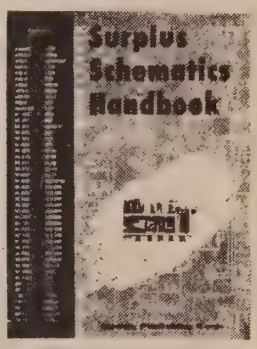

CQ ANTHOLOGY

#102-1. We've looked back through the years 1945-1952 and assembled all in one place the articles that have made a lasting stir. The issues containing most of these articles have long ago been sold out and are unavailable.

$2.00

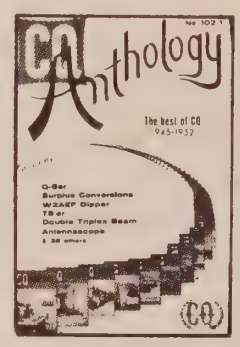

DX ZONE MAP

Brand New! Amateur Radio World-Wide DX & Zone Map complete, accurate and up to the minute with Prefix, Zone Boundaries, Great Circle beam bearings. 4 Colors, 36 by 42 inches on heavy vellum map paper. Mailed in heavy cardboard mailing tube. Only $3.00 Cat. #118

Technical Series

Order direct from:

COWAN PUBLISHING CORP.

300 W. 43d Street

New York 36, New York

New York City Residents Add 3% Sales Tax

1. RADIO OPERATING QUESTIONS AND ANSWERS

Prepare to pass license examinations quickly and easily with this reliable question and answer book By J. Hornung, M.I.T., and A. McKenzie, McGraw-Hill Book Co. 12th Ed., 571 pp., 142 illus., over 1900 answers. $6.25

2. ELECTRONIC COMMUNICATION

Fundamental theory and practice for modern electronic communication—a basic "how-to" guide to operation, maintenance, professional and amateur license examinations. By R. Shrader, Oakland Junior College. 936 pp., 771 charts, graphs, tables, and illus., $13.00

3. BASIC ELECTRONICS

This easy-to-read book covers everything from basic electricity to tubes and transistors. Helps you learn electronics from A-to-Z at home! By B. Grob, RCA Institutes, Inc. 524 pp., 376 illus., $9.25

4. APPLICATION OF ELECTRONICS

This big guidebook gives you the electronic know-how that helps you perform better, faster technical work. By B. Grob, RCA Institutes, Inc.; and M. Kiver. 618 pp., 495 illus., $10.00

5. TRANSISTORS IN RADIO, TELEVISION, AND ELECTRONICS

Provides a simplified summing up of facts about transistors and transistor circuits—how they are designed and work, and their use and maintenance. By M. Kiver, 2nd Ed., 423 pp., 337 illus., $7.95

SEND CHECK OR MONEY ORDER TO:
CQ, BOOK DEPT.
300 West 43rd St., N. Y. 36, N. Y.

Send me book(s) whose numbers I have circled below, for which I enclose check or money order in full payment.

1 2 3 4 5

(PRINT)
Name .....

Address .....

City .....Zone .....State .....

Money refunded if not completely satisfied C-6

GONSET

the nation's most experienced VHF packager, now offers a whole new series

COMMUNICATOR IV

for 2-meter, 6-meter, 1¼-meter operation

And there's a Communicator VFO that adapts to use with any of these units **OR** that can be used with any transmitter using 3rd overtone crystals in the 24 mc range.

Any model can be used as a fixed, mobile, or portable station. All models have built-in power supply adaptable to 12 V DC or 117 V AC. Transistorizing eliminates need for vibrator. Power cables furnished.

Communicator IV	**2-meter**	**$369.50**
	6-meter	**$349.50**
	1¼-meter	**$394.50**
Communicator VFO		**$ 69.50**

GONSET

Division of Young Spring & Wire Corporation
801 South Main Street, Burbank, California

Nothing out performs a VIKING for VHF

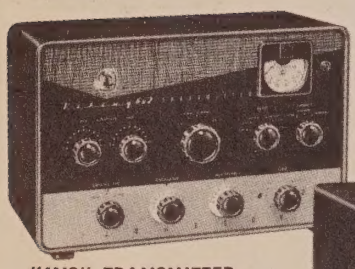

"6N2" TRANSMITTER

"6N2" CONVERTER

"RANGER-II" TRANSMITTER/EXCITER

This popular 75 watt CW or 65 watt phone transmitter also serves as an RF/audio exciter for high power. Self-contained—instant bandswitching 160 through 6 meters! Built-in VFO or crystal control. High gain audio – timed sequence keying – effectively TVI suppressed. Pi-network antenna load matching from 50 to 500 ohms. Final amplifier tube is a 6146. With tubes, less crystals.

Cat. No.		Amateur Net
240-161-1	Kit	$229.50
240-161-2	Wired and tested	$329.50

"6N2 THUNDERBOLT" AMPLIFIER – Rated at 1200 watts P.E.P. input SSB and DSB, Class AB_1; 1000 watts CW, Class C; and 700 watts input AM linear. Continuous bandswitching coverage 6 and 2 meters – TVI suppressed – wide range pi-network, output. Unique silver-plated Hi-Q coaxial line; silver-plated anode and other external portions of 3034 tubes. With tubes and built-in power supply.

Cat. No. 240-362-1	Kit	Amateur Net $524.50
Cat. No. 240-362-2	Wired and tested	Amateur Net $589.50

"6N2" TRANSMITTER – Rated at 150 watts CW and 100 watts phone, instant bandswitching coverage 6 and 2 meters! Shielded and TVI suppressed – may be used with the Viking I, II, "Ranger," "Valiant" or similar power supply/modulator combinations. Crystal or external VFO control with 8-9 mc. output. With tubes, less crystals.

Cat. No. 240-201-1	Kit	Amateur Net $129.50
Cat. No. 240-201-2	Wired and tested	Amateur Net $169.50

"6N2" VFO – Replaces 8 to 9 mc. crystals in frequency multiplying 6 and 2 meter transmitters. Exceptionally stable. Output range: 7.995 to 9.010 mc. With tubes and power cable.

Cat. No. 240-133-1	Kit	Amateur Net $34.95
Cat. No. 240-133-2	Wired and tested	Amateur Net $54.95

"6N2" CONVERTER – Instant front panel switching from normal receiver operation to 6 or 2 meters. Excellent image and I. F. rejection. Ranges: 26 to 30 mcs., 28 to 30 mcs., 14 to 18 mcs., or 30.5 to 24.5 mcs. With tubes.

Cat. No. 250-43	Kits	Amateur Net $59.95
Cat. No. 250-43	Wired	Amateur Net $89.95

Viking®

FIRST CHOICE AMONG THE NATION'S AMATEURS

Free Catalog

New—fully illustrated 32 page catalog covering the complete line of Viking Amateur Transmitters and Accessories.

E. F. JOHNSON COMPANY

4001 Tenth Ave. S.W. • Waseca, Minnesota

● Please send me your newest amateur catalog

NAME_____

ADDRESS_____

CITY_____ STATE_____

BARRY ELECTRONICS CORP

NATIONAL

NC-270

$249.95

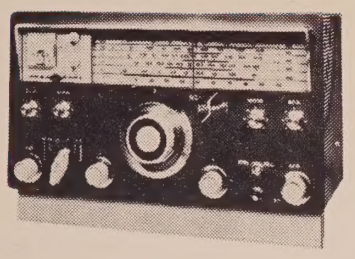

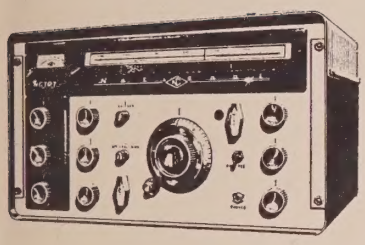

NC-303

$449.00

HAMMARLUND

HQ-110

A low-cost, amateur bands receiver offering operational advantages found in receivers costing far more **$249.00**

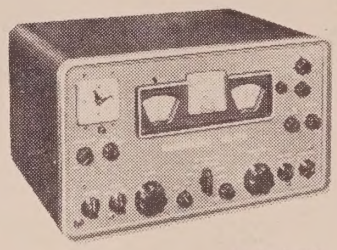

HQ-170

World's most popular SSB amateur bands receiver offering outstanding selectivity **$359.00**

HQ-180

A fine quality general-coverage, SSB receiver offering commercial performance at amateur price **$429.00**

E. F. JOHNSON

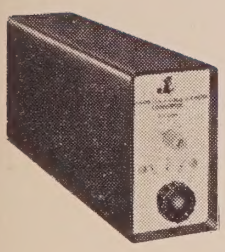

"6N2" CONVERTER — Provides instant front panel switching from normal receiver operation to either 6 or 2 meters. Available kit or wired in either 26 to 30 mcs.; 28 to 30 mcs.; 14 to 18 mcs.; or 30.5 to 24.5 mcs. Specify range desired. With tubes.

Cat. No.	Amateur Net
Kits	$59.95
Wired Units	$89.95

"6N2" VFO— Amateur Net
Kit.....**$34.95**
Wired..... **54.95**

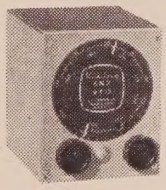

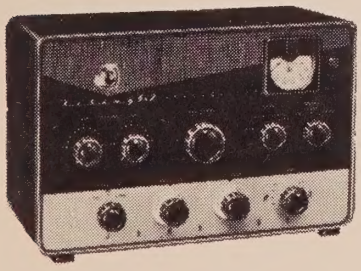

"6N2"—Instant bandswitching coverage of both 6 and 2 meters. Power input rated at 150 watts CW, and 100 watts AM phone. With tubes.

Cat. No.	Amateur Net
240-201-1..Kit	$129.50
240-201-2..Wired	$169.50

TUBES

6AM4	2.00
6AN4	.90
6AF4	1.40
2E26	1.95
4X150A	12.00
4X150D	16.00
4X150G	22.00
4CX250B	33.00
4X250B	25.00
4X250M	30.00
4CX300A	48.50
4CX1000A	140.00
826	.45
829B	7.50
832	3.95
5763	1.75
5894/AX9903	19.50
6146	4.25
6360(Amperex)	Write

SPECIALS

MOBILE TRANSMITTER

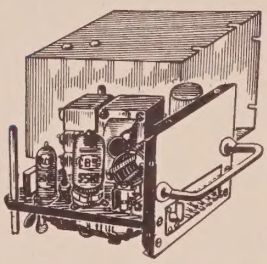

Uses 5618 crystal oscillator into CBS 5516 amplifier. Modern design. Only 7 lbs. net weight including built-in 6 V. vibrator power supply. Completely enclosed in aluminum cabinet (5-1/2"H x 7"W x 8"D). Furnished with crystal that doubles near 10 meter band. Will require slight and easy modification for 10 meter operation. A real beauty.

With tubes - ***$11.95***

VHF TRANSMITTER

BRAND NEW!

Perfect for 2 meter and/or 1-1/4 meter conversion. Late, modern design. Uses two 6201's into single Amperex 6360 twin Tetrode. Xmtr only 4" x 4" x 11". Only 3-3/4 lbs. Complete with 10-1/2" chrome antenna. Furnished complete with A and B Battery pack, & connection cable and schematic & conversion info. with case: Battery weight: 23 lbs.

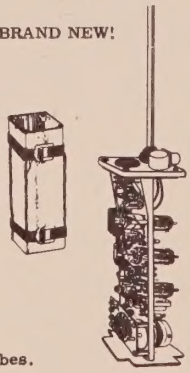

PRICE: ***$15.00*** with all tubes.

(We can ship without battery - same price $15.00).

Shipments prepaid on all items except VHF Transmitter and Mobile Transmitter

BARRY ELECTRONICS CORP. • 512 BROADWAY • NEW YORK 12, N. Y. • WAlker 5-7000

CQ's 50-Watt 6-Meter Exciter... uses RCA Tubes throughout

Designed and built by W2LCB—and described in detail in CQ for December 1960—this neat, compact 50-Mc exciter offers new possibilities for the 6-meter man who is looking for a clean, stable signal on VHF. Noteworthy is the fact that every tube in the rig is an RCA type—from the rf power amplifier to the power-supply rectifier.

Preferred by amateurs ever since the early days of CW, RCA tubes have earned a field-proved reputation for top performance. Emission capability is outstanding—even after long hours of operation under extreme conditions. Conservative ratings pay off in more operating hours per tube dollar invested.

It makes no difference if your rig is "home-brew" or commercial, you'll do better every time—with "RCA's" in the sockets. Your RCA Industrial Tube Distributor is *the man to see for every RCA type you need.*

RCA-6AG7
Beam Power Oscillator-Tripler

RCA-5763
Beam Power Frequency Doubler

RCA-6AQ5-A
Beam Power Clamp Tube

RCA-6146
Beam Power RF Amplifier

RCA-816
Half-Wave Mercury-Vapor Rectifier

RCA®
The Most Trusted Name in Electronics
RADIO CORPORATION OF AMERICA